EFFECT OF SLOT SHAPE ON LEAKAGE FLUX IN ROTATING ELECTRICAL MACHINES: ANALYSIS WITH DECISION TREE

***H. Selcuk NOGAY*[1]**

[1]Bursa Uludağ University, Faculty of Engineering, Department of Electronics and Electricity Engineering, Bursa / Turkiye

Abstract: This study investigates the effect of slot shapes on leakage flux in rotating electrical machines using a Decision Tree (DT) regression model. Slot shapes significantly influence the performance and efficiency of electrical machines by affecting the slot leakage flux and associated energy losses. To address this, a dataset of 755 entries representing various slot dimensions and their equivalent permeability was analyzed. The DT model demonstrated high accuracy, with an R^2 value of 0.99 during testing and a low Root Mean Squared Error (RMSE) of 0.0958. The results highlighted the model's ability to classify and predict the permeability of six distinct slot shapes, providing valuable insights for optimizing motor design. Graphical analyses further illustrated the variations in flux distribution across different slot types, emphasizing the advantages of machine learning in enhancing traditional motor design processes. This research contributes to the development of efficient, data-driven solutions for designing advanced electrical machines.

Keywords: Slot Shape, Leakage Flux, Decision Tree, Machine Learning, Electrical Machine Design, Slot Permeability

INTRODUCTION AND THEORETICAL FRAMEWORK

Rotating electrical machines are fundamental components in industrial and commercial applications, requiring optimal performance and efficiency. One critical factor influencing their performance is the design of the stator slot, which directly affects slot leakage flux, energy losses, and overall operational efficiency. Slot leakage flux, determined by the slot's shape and dimensions, has been a challenging aspect for designers, as it impacts not only the electromagnetic properties but also the thermal and mechanical behavior of the machine.

Theoretical studies and practical analyses have established that the slot shape influences various performance parameters, including current harmonics (Birbir et al., 2007a; Birbir et al., 2007b; Birbir et al., 2008), internal temperatures (Nogay, 2011), and winding insulation integrity (Silva et al., 2019; Nogay, 2008). For instance, research has shown that irregularities in slot design can lead to increased flux leakage and higher energy losses (Birbir & Nogay, 2007a; Birbir & Nogay, 2007b), thereby reducing machine efficiency. Addressing these challenges requires precise prediction and optimization of slot leakage flux, which traditionally involves complex mathematical calculations and iterative testing (Birbir & Nogay, 2007).

In this context, the application of machine learning techniques, such as Decision Tree (DT) regression models, has emerged as a promising solution. These models offer the ability to analyze non-linear relationships and capture intricate patterns within datasets, enabling accurate predictions of slot leakage flux based on slot dimensions. By employing a DT model, this study aims to bridge the gap between theoretical design principles and practical implementation, providing a robust framework for optimizing slot shapes in rotating electrical machines.

This paper builds upon established theoretical frameworks while introducing innovative methodologies to enhance slot design. The following sections outline the methodology, results, and implications of using DT models to classify and predict the effects of slot shapes on leakage flux. By leveraging advanced computational techniques, this study contributes to the development of more efficient and reliable electrical machines, meeting the growing demands of modern industries.

PURPOSE

The purpose of this study is to graphically demonstrate the effect of slot shape on slot equivalent permeability, which is dependent on slot leakage self-induction coefficient representing slot leakage fluxes, and to estimate slot equivalent permeability with decision trees depending on the variables in slot dimensions and the formation form.

SCOPE

The stator slot shapes where the stator windings are placed in rotating electrical machines are produced in six different forms and different sizes, as stated in the literature. In this study, it is aimed to classify slot leakage flux depending on the slot shapes and sizes used in all rotating electrical machines. Today, machine learning methods are widely used in solving many problems. The DT method is one of these methods. In this study, DT was selected and applied as the method that provides the most optimum result from machine learning regression methods.

METHODOLOGY

Obtaining the dataset

To create a dataset suitable for analysis, the slot leakage flux and its influencing factors were systematically identified. Slot leakage flux, a critical parameter in electrical machine design, was quantified using the slot leakage self-induction coefficient. This coefficient is influenced by the equivalent permeability of the slot, which varies according to its shape and dimensions. For this study, six distinct slot shapes were considered, each with predefined maximum and minimum dimensional values.

Using these predefined limits, a systematic calculation was performed to determine the equivalent permeability for each slot shape, varying the slot height (h1) incrementally by 1 mm. This iterative approach allowed for the generation of a comprehensive dataset comprising 755 data points. Each data entry included multiple input parameters, such as slot dimensions (h1, h2, h3, h4, b1, b3, b4) and the corresponding equivalent permeability as the output (Chari et al., 1986; Nogay et al., 2012).

The dataset was structured into a matrix format with eight input columns and one output column. A proportion of the dataset was allocated for model training, validation, and testing to ensure the robustness and reliability of the Decision Tree regression model. This structured approach not only facilitated accurate model training but also ensured the dataset's relevance and applicability to practical machine design scenarios. By employing a rigorous methodology for dataset generation, this study establishes a solid foundation for leveraging machine learning techniques in electrical machine optimization. Table 1 shows the numbering of slot types used in the data set.

Table1. Numbering of the Slot types

Slot types	**Numbering**
Gradual	1
Semi closed	2
Trapeziodal	3

Open	4
Semi closed round	5
Round	6

Slot leakage field of gradual slot form

Figure 1 shows the gradual slot form. For calculation of equivalent conductivity of slot (λ_d), since number of conductors remaining below the point x is;

$$z_x = \frac{z}{h_1} x \tag{1}$$

and conductivity of flux pipe passing through this point with a thickness of dx is;

$$d\lambda_x = \frac{dx}{b_x} \tag{2}$$

$$\lambda_d = \frac{1}{z^2}\left[\int_0^{h_1}\left(\frac{z}{h_1}x\right)^2 \frac{dx}{b_1} + z^2\frac{h_2}{b_1} + z^2\frac{h_3}{b3} + z^2\frac{h_4}{b_4}\right] \tag{3}$$

so

$$\lambda_d = \frac{h_1}{3b_1} + \frac{h_2}{b_1} + \frac{h_3}{b_3} + \frac{h_4}{b_4} \tag{4}$$

is calculated (Park et al., 1995).

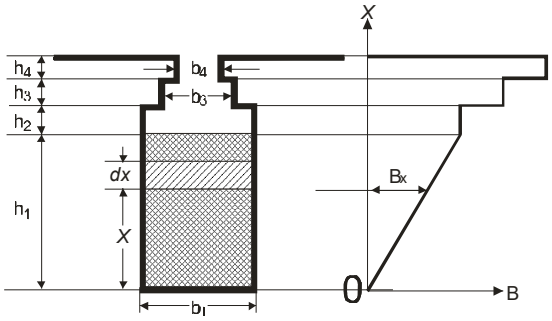

Figure 1. Slot Leakage Diagram in the Form of Gradual Slot (Nogay et al., 2012)

Slot leakage field of semi-closed slot form

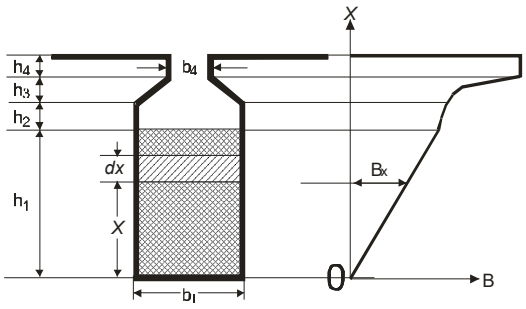

Figure 2. Slot Leakage Diagram for Semi-Closed Slot Form (Nogay et al., 2012)

For the groove shown on Fig. 2, by placing the following expression

$$b_3 = \frac{b_1 - b_4}{2.3 * \ell og \frac{b_1}{b_4}} \qquad (5)$$

in its respective position at equation numbered (4), λ_d is calculated (Park et al., 1995; İkizli, 1962).

Slot leakage field of the trapezoid slot form

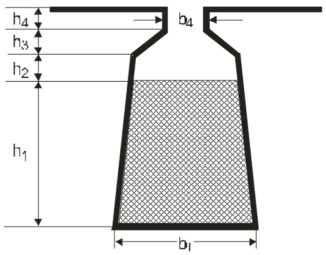

Figure 3. Leak Field Diagram for the Trapezoid Shaped Slot (Nogay et al 2012)

For the trapezoidal slot shown in Figure 3, equation 4 and equation 5 are exactly valid. (Ikizli, 1962).

Slot leakage field of open slot form

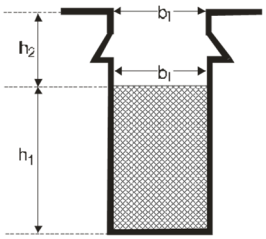

Figure 4. Leakage Field Diagram for Open Slot Form (Nogay et al 2012)

In figure 4, for the open slot form, the following formula is used (İkizli, 1962; Chalmers & Dodgson, 1969).

$$\lambda_d = \frac{h_1}{3b_1} + \frac{h_2}{b_1} \tag{6}$$

Slot leakage field of round semi-closed slot form

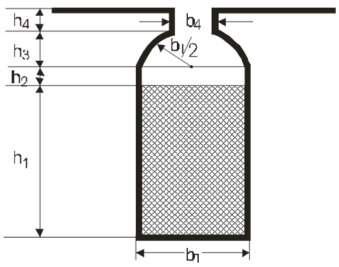

Figure 5. Leakage Field Diagram for Semi-Closed Slot Form (Nogay et al 2012)

For the slot form in Figure 5;

$$\frac{h_3}{b_3} = \frac{1}{2}\arcsin\sqrt{1-\left(\frac{b_4}{b_1}\right)^2} \tag{7}$$

The formula (4) is used on the condition of taking the foregoing equation (Chalmers & Dodgson, 1969; Erlicki & Appelbaum, 1968).

Slot leakage field of round slot form

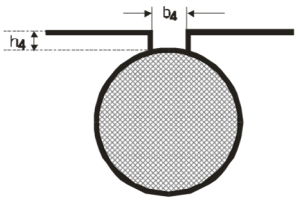

Figure 6. Leakage Field Diagram in Round Slot Form (Nogay et al 2012)

For the round slot form shown in Figure 6;

$$\lambda_d = 0.66 + \frac{h_4}{b_4} \tag{8}$$

formula is used (Chun et al., 1997; Birch & Butler, 1971; Nogay et al., 2012).

Decision tree regression model

The model employed is a DT Regression model, specifically utilizing an "Optimizable Tree" preset in the MATLAB environment. This preset encompasses automated hyperparameter tuning for optimal performance. The optimization process leveraged

Bayesian optimization with an "Expected improvement per second plus" acquisition function. The absence of a "Training time limit" suggests the optimization process was allowed to run until an optimal solution or a predefined number of iterations (30 in this case) was reached (Mitchell, 1997).

Evaluation Metrics

To assess the performance and accuracy of the Decision Tree regression model, the following evaluation metrics were employed:

1. **Root Mean Squared Error (RMSE):** This metric measures the standard deviation of residuals, providing insight into the average magnitude of prediction errors. A lower RMSE indicates higher model precision.
2. **R-squared (R^2):** This statistic represents the proportion of variance in the dependent variable that is predictable from the independent variables. An R^2 value close to 1 indicates a strong model fit.
3. **Mean Squared Error (MSE):** MSE calculates the average squared differences between observed and predicted values. It is a key indicator of the model's overall performance.
4. **Mean Absolute Error (MAE):** MAE represents the average absolute differences between predicted and actual values, providing an easily interpretable measure of prediction accuracy.
5. **Mean Absolute Percentage Error (MAPE):** This metric evaluates the prediction accuracy as a percentage, offering a normalized view of the model's error rate across the dataset.

RESULTS

The performance metrics, including Root Mean Squared Error (RMSE), R-squared (R^2), Mean Squared Error (MSE), Mean Absolute Error (MAE), and Mean Absolute Percentage Error (MAPE), are summarized in Table 2.

Table 2. Training and Testing Results

	RMSE	R^2	MSE	MAE	MAPE (%)
Testing	0.0958	0.99	0.0091	0.0479	2.8
Training	0.1207	0.98	0.0145	0.0611	3.7

Figures 7(a-f) and 8 show the regression results and the effect of each slot type on the prediction of slot equivalent permeability. Gradual and round slots demonstrated smoother leakage flux transitions due to their streamlined shapes.

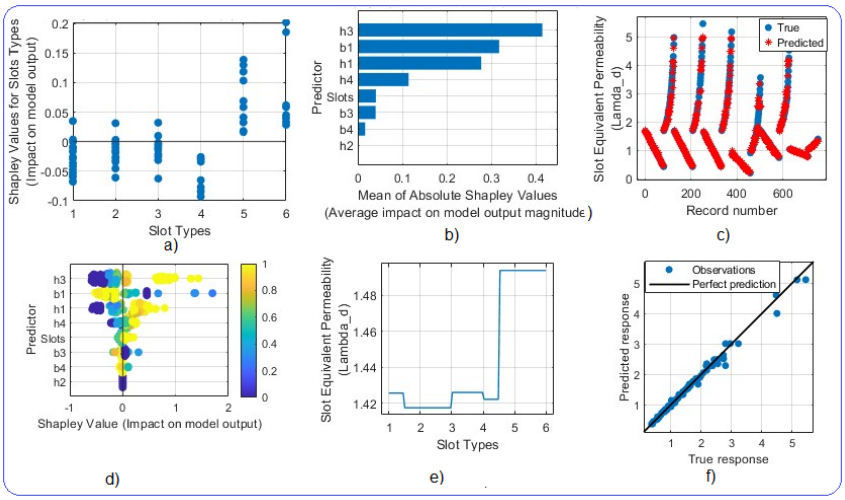

Figure 7. Graphical Results from Testing the DT Model; a) Shapley Dependence, b) Shapley İmportance, c) Response Plot for the Predictions d) Shapley Summary, e) Partial Dependence, f) Linear Regression

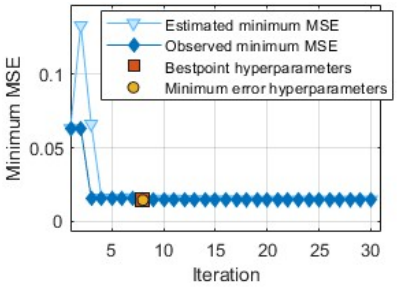

Figure 8. Minimum MSE Plot for DT Model

CONCLUSION

This study demonstrates the effectiveness of using Decision Tree models for predicting permeability in rotary electrical machines based on slot geometries and types. The analysis highlights the substantial impact of slot dimensions, including slot height and width, as well as the critical role of slot types, on permeability predictions.

The findings emphasize the combined influence of slot types and geometric parameters on permeability predictions. The Decision Tree model successfully integrates these features, demonstrating its potential for addressing engineering challenges related to slot design and performance optimization. In summary, the DT model demonstrated exceptional performance in predicting slot equivalent permeability across diverse slot

shapes, providing valuable insights for optimizing slot designs in rotating electrical machines.

In conclusion, this study not only validates the Decision Tree model as an effective tool for permeability prediction but also underscores the critical importance of slot geometry and type in influencing machine performance. By providing interpretable insights and reliable predictions, this approach has the potential to guide the design and optimization of rotary electrical machines. Future studies could extend this framework by incorporating additional machine parameters and exploring other advanced machine learning techniques to further enhance predictive capabilities.

REFERENCES

Birbir, Y., & Nogay, H. S. (2007). Harmonic Variations in Three-phase Induction Motors Fed by PWM Inverter with Different Stator Coil Pitches. Proceedings of the 6th WSEAS.

Birbir, Y., & Nogay, H. S. (2007a). Estimation of Total Harmonic Distortion in Short Chorded Induction Motors Using Artificial Neural Network. 6th WSEAS Int. Conf. on Applications of Electrical Engineering , İstanbul, Turkey, pp.261-267.

Birbir, Y., & Nogay, H. S. (2007b). Voltage and Current Harmonic Variations in Three-Phase Induction Motors with Different Stator Coil Pitches. Internationa Jorunal of Energy, 4, 122-129.

Birbir, Y., Nogay, H. S., & Ozel, Y. (2008). Estimation of Low Order Odd Current Harmonics in Short Chorded Induction Motors Using Artificial Neural Network. 9th WSEAS Int. Conf. on Neural Networks (NN' 08), Sofya, Bulgaria, pp. 387-394.

Birbir, Y., Nogay, H. S., & Özel, Y. (2007b). Neural Network Solution to Low Order Odd Current Harmonics in Short Chorded Induction Motors. Int. J. of Systems Applications, Engineering & Development, 1, 21-28.

Birbir, Y., Nogay, H. S., & Taskin, S. (2007a). Prediction of Current Harmonics in Induction Motors with Artificial Neural Network. International Aegean Conference on Electrical Machines and Power Electronics, (ACEMP'07), Muğla, Turkey, pp. 123-129.

Birch, T. S., & Butler, O. I. (1971). Permeance of closed-slot bridges and its effect on induction-motor-current computation. Proceedings of the Institution of Electrical Engineers, 118(1), 169-172.

Chalmers, B. J., & Dodgson, R. (1969). Saturated leakage reactances of cage induction motors. Proceedings of the Institution of Electrical Engineers, 116(8), 1395-1404.

Chari, M. V. K., Bedrosian, G., Roeth, J., & Konrad, A. (1986). Unification of Electromagnetic and Thermal Analyses to Determine Losses and Temperature Distribution in a Slot - Embedded Cunductor. North-HollandFinite Elements in Analysis and Design, 2, 61-81.

Chun, J., Jung, H. K., & Yoon, J. S. (1997). Shape optimization of closed slot type permanent magnet motors for cogging torque reduction using evolution strategy. IEEE Transactions on Magnetics, 33(2), 1912-1915.

Erlicki, M. S., & Appelbaum, J. (1968). Slot-shape considerations in electrical machinery. Proceedings of the Institution of Electrical Engineers, 115(11), 1705-1706.

Ikizli, O. (1962). Distribution, Losses and Warm up on Electrical Machines-Elektrik Makinalarında Dağılma, Kayıplar ve Isınma. Library of Istanbul Technical University, No: 482, pp. 15-18.

Mitchell, T. (1997). Machine Learning. McGraw Hill, New York.

Nogay, H. S. (2008). A Neural Network Solution to Design Dual Stator Winding Insulation Level Detector for Three Phase Induction Motors. WSEAS Transactions on Advances in Engineering Education, 10, 234-240.

Nogay, H. S. (2011). Prediction of internal temperature in stator winding of three-phase induction motors with ann. European Transactions on Electrical Power, 21, 120-128.

Nogay, H. S., Akinci, T. C., & Guseinoviene, E. (2012). Determination of effect of slot form on slot leakage flux at rotating electrical machines by the method of artificial neural networks. Energy Education Science and Technology Part A-Energy Science and Research, 29, 451-462.

Park, S., Lee, H. B., Hahn, S., & Park, I. (1995). Stator slot shape design of induction motors for iron loss reduction. IEEE Transactions on Magnetics, 31(3), 2004-2007.

Silva, A. M., Antunes, C. H., Mendes, A. M. S., & Ferreira, F. J. T. E., (2019). Extended Multiobjective Optimization of Stator Winding Design. IEEE Transactions on Energy Conversion, 34(4), 1-10.