JOURNAL OF OPTOELECTRONİCS AND ADVANCED MATERİALS, Vol. 10, No. 11, November 2008, p. 3012 - 3015

Molecule sensing in air

C. AKAY
Uludag University,Department of Physics,16059 Görükle, Bursa, Turkey

In this work, a sensor has been constructed to detect molecules such as vapor, CO_2 stream and smoke (tobacco) in the air by using an optical device with two pair led-photodiode. The working principle of the optical device is based on blocked beams.

(Received September 1, 2008; accepted October 30, 2008)

Keyword: Beer–Lambert law, Optoelectronic detection, Extinction, Sensor, Optical device

1. Introduction

Recently developed infrared light emitting diodes (LEDs) with sharp wavelengths have been widely used to describe molecules as moisture, CO_2, SO_2 in the air. The working principle of these optical devices with leds is based on infrared absorption. Most of the gases and liquids have strong absorption lines in infrared spectral range. Table 1 shows the absorption lines of some gases in mid infrared range.

Table 1 List of absorption lines in MIR range[1].

CH_4	3.2-3.45 μm	HC1	3.3-3.7 μm
C_2H_2	2.9-3.19 μm	HOC1	2.6-2.9 μm
C_2H_4	3.1-3.4 μm	HBr	3.7-4.0 μm
C_2H_6	3.3 μm	HI	2.2-2.3 μm
CH_3Cl	3.2-3.3 μm	H_2S	3.7-4.4 μm
OCS	3.45; 4.87 μm	HCN	2.94-3.1 μm
H_2O	2.5-2.8 μm	N_2	4.0-4.54 μm
CO_2	4.2-4.3 μm	NH_3	2.27; 2.94 μm
OH^{--}	2.38-2.63 μm	NO^+	4.0 -4.44 μm
H_2CO	3.3-3.7 μm	HNO_3	5.74-5.98 μm
CO	4.4-4.8 μm	NO_2	3.4 μm
HO_2	2.73-3.1 μm	SO_2	4.0 μm

According to the literature scanning, there are two methods used of designing of the optical devices. Firstly, lights falling on or passing through the medium are converted to the photo signals to perform measurements about the properties of the medium or an object, e.g. amount of CO_2, humidity, absorption coefficient, optical density, etc. Amplitudes of photo signals are determined and compared generally by taking the ratio of these voltages. Since optical densities vary in a wide range, amplitudes of photo signals also vary in a wide range. Therefore, the photo signal amplifier used in the circuit must also operate in a wide range.

Secondly, if periodical light pulses are used, the pulsed signals obtained must be converted to dc voltages before the comparison. The following steps are taken respectively. The medium is illuminated by lights with suitable wavelengths (single wave and double wave), lights passing through the medium are converted to photo signals, the pulsed photo signals are converted to dc voltages, the obtained analogue signals are compared and mathematical operations are performed (the reference and the measurement voltages are compared and the ratio, the difference, the sum or the logarithm is taken), the analogue value can be converted to a digital signal with an ADC if it is required [1–4].

The particles found in the air can be described by known methods with leds are also used. In these methods, the light transmission as detected by the photo detector facing the beam is constant if there are no particles present. Each time a particle traverses the beam, some part of the incident beam is lost, or blocked either due to the light scattered out of or absorbed by the particle. The light flux detected by the photo detector is then reduced and a negative signal pulse is produced. The amplitude of the pulse is directly related to the particle size [5].

In this work, the first method has been used. From the absorption spectroscopy, the intensity of light passing through the medium can be expressed according to the Beer–Lambert law:

$$I = I_0 e^{-\alpha_E L} \tag{1}$$

where L is the length of the light path and α_E is the sum of air plus particulate scattering and absorption [6]. Calculations have been made by using Matlab Version 7.0.1.24704 (R14) Service Pack 1.

2. Optoelectronic design

The circuit schemas of the optical device are given in Figs.1, 2 and 3. They are simply consisting of transmitter and receiver. Two commercial leds used in the transmitter section to produce a beams at the 650 nm (red) and 940 nm (infrared) wavelengths. The same leds may use as optical detector because of compatible wavelengths. Here, two other leds are also used as receiver photo detector.

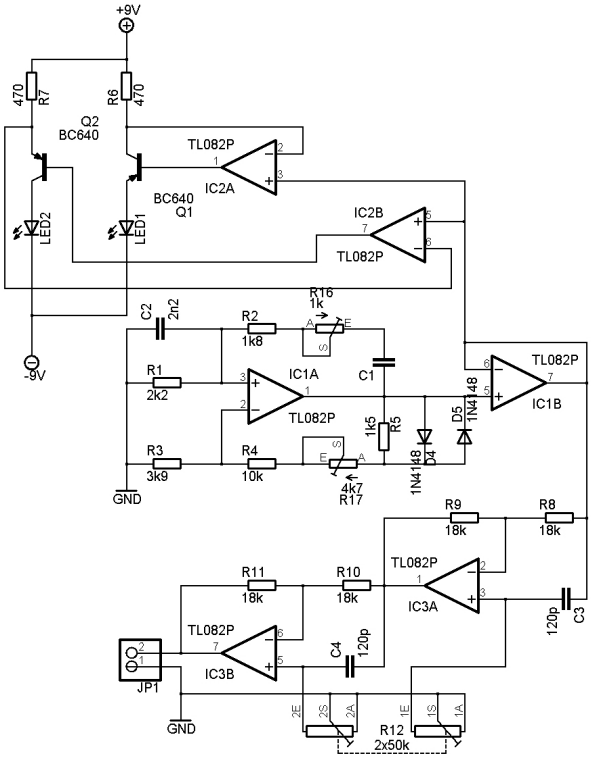

Fig.1. Led drivers and phase shifter.

In order to protect external effects the led-photodiode pairs have been placed into the metal case in the x-y plane mutually. In the experiment, the stream is given from bottom the box. Trace of the particles in the stream have been detected either of the pairs (Fig.4).

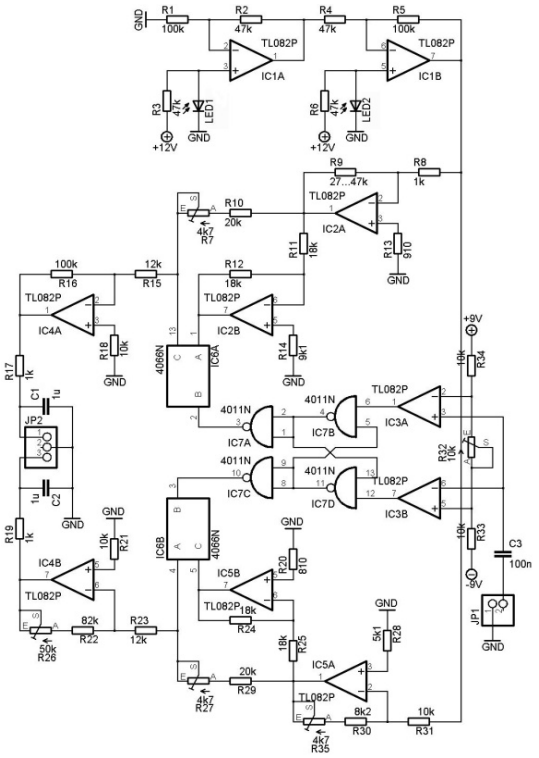

Fig.2 Phase sensitive detector.

The Wien-Bridge type low frequency sine generator produces a voltage at frequency 70 kHz. IC2A and IC2B converts this voltage to current to drive the infrared led's (see Fig.1). This generator has also been feeding phase shifter with the signal. Phase shifter included IC3A ve IC3B operational amplifiers which is necessary for phase sensitive detector at the receiver part of the device [7– 9].

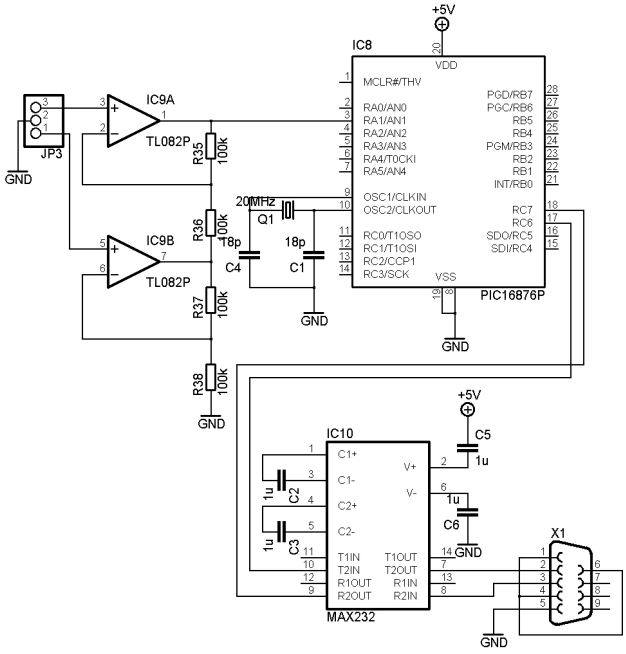

Fig. 3. ADC and RS232C.

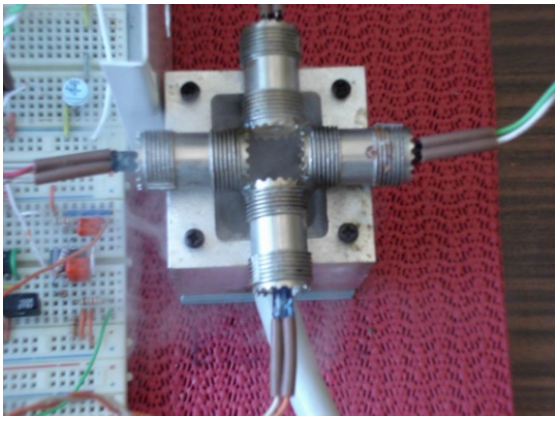

Fig.4 The led-photodiode pairs.

Phase sensitive detector compares phases of the two signals which were produced by photodiodes in the receiver part and the reference signal coming from the transmitter. Thus a noiseless signal which carries knowledge of reciprocal influence between particle-beam is obtained. This knowledge is send to PIC16F876 which has a 10 bit ADC for digitization [10]. The ADC worked at the clock frequency 20 MHz communicates with PC by means of IC MAX232. This integrated circuit is required to provide serial communications RS232C standard [11]. Fig.5 shows the entire experimental setup.

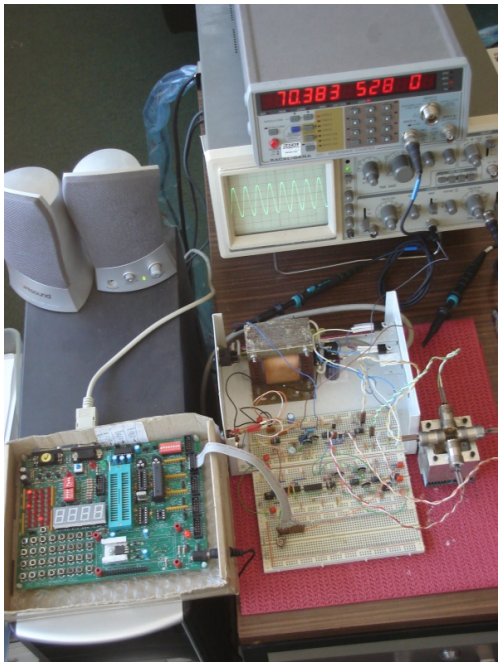

Fig. 5. Photograph of the experimental setup.

3. Measurements and results

Data have been taken for free air, vapor, CO_2 stream and tobacco respectively for 60 s time interval. Every single data taken is stored and converted as data arrays for Matlab in a PC. Fig. 6 shows the graph of the processed arrays in Matlab environment.

At Fig.7, horizontal axis is path of the medium and the vertical axis is transmittance values which were found according to Beer–Lambert law as:

$$\alpha_{Ei} = -\frac{1}{L_i}\ln\left(\frac{I_i}{I_0}\right) \qquad (2)$$

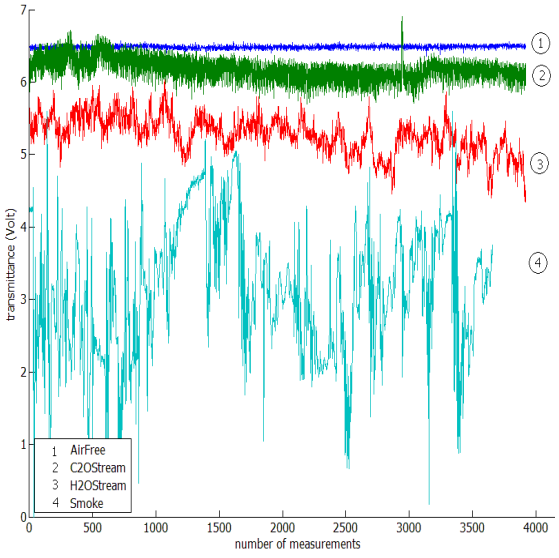

Fig.6 Experimental measurements of the I(α_E) values at L=5 cm for all streams.

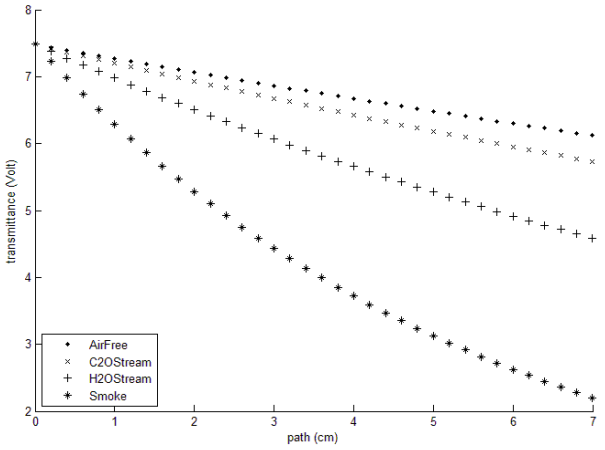

Fig.7. The exponential variation of the transmittance versus L for all streams

Table 2 shows the experimental results of transmittance values for i^{th} extinction coefficients. Here L=5 cm and I_0 is 7.483 V for L=0.

Table 2. Experimental results of the measurements.

Sample	I	Ln (I)	α_E
Air Free	6.4835	1.8693	0.0287
CO_2 Stream	6.1844	1.8220	0.0381
H_2O Stream	5.2725	1.6625	0.0700
Smoke (tobacco)	3.1257	1.1397	0.1746

4. Conclusions

This work shows that, the molecular identification is possible by using their extinction coefficients. The designed device here is compact, robust and has a very good response. Our design can also be used for various molecular gasses with a calibration.

References

[1] LEDs and PDs Application, http://www.ibsg-st-petersburg.com/About_Us/applicat.htm
[2] E. Musayev, Conversion method and system, Sensors and Actuators A 125 (2006) 234–241.
[3] M. A. Afrailov, C. Akay, M. Özer, Romanian Journal of Pysiscs **49**(3–4), 256 (2004).
[4] S. F. Johnston, Gas monitors employing infrared leds, Meas. Sci. Technol. **3**, 191 (1992).
[5] R. Xu, Particle Characterization: Light Scattering Methods, Kluwer Academic Publishers, 2000, Chap.4, p182–189.
[6] Aki Virkkula, Norman C. Ahlquist, David S. Covert, Patrick J. Sheridan, William P. Arnott, John A. Ogren, A Three-Wavelength Optical Extinction Cell

for Measuring Aerosol Light Extinction and Its Application to Determining Light Absorption Coefficient, Mai 1999; Meas. Sci. Technol. **3**, 191 (1992).
[7] Physics 404 Lock-In Amplifier Lab, Lab 6 - Lock-In Amplifier & Phase Shifters, The Board of Trustees of the University of Illinois, Revised 4/2003, 1999.
[8] Signal Recovery, What is a Lock-in Amplifier? Technical Note TN 100, Web Site: www.signalrecovery.com
[9] Z. Horowitz, W.Hill, The Art of Electronics, Cambridge University Press **285**, 629 (1983).
[10] Microchip, PIC16F87XA, Data Sheet 28/40/44-Pin Enhanced Flash Microcontrollers, Microchip Technology Inc., 2003.
[11] Maxim, MAX232, Multichannel RS-232 Drivers–Receivers, Maxim Integrated Products, 2001

Corresponding author: cenay@uludag.edu.tr

SITE NEWS

NEW ISI Accepted JOURNAL!!! OAM - RC
Optoelectronics and Advanced Materials - Rapid Communications OAM-RC
http://inoe.inoe.ro/oam-rc

INOE Publishing House
Integra Natura Omnia et Aeterna

ATTENTION!!!
The site of the of International Conference on Amorphous and Nanostructured Chalcogenides is open. Please register NOW.

TOP ARTICLES

- Vectoral response under photo-excitation in amorphous chalcogenides and azobenzene polymer films: a comparison (836)
- Photoinduced anisotropic deformations in covalent chalcogenide glasses (623)
- X-ray optics - a tool for X-ray diagnostic and therapy (574)

Content of the next issue

Vol. 0, ISS. 11

Proceedings of the 8th international Balkan Workshop on Applied Physics

N. Woehrl, V. Buck

Spectroscopic characterization of nanocrystalline diamond

V. Privman

Diffusional nucleation of nanocrystals and their self-assembly into uniform colloids

G. Strat, S. Gurlui, M. Strat, A. Farcas, S. Stratulat

C. Akay

Molecule characterization in air

Regular Papers

MIAR

Information Matrix for the Analysis of Journals

Version 2017 live

JOURNAL OF OPTOELECTRONICS AND ADVANCED MATERIALS

ISSN 1454-4164 | Visibility | Publisher's info

Title	JOURNAL OF OPTOELECTRONICS AND ADVANCED MATERIALS
related ISSN	1841-7132
Country	Romania
Subject	PHYSICS AND SPACE SCIENCES, INDUSTRIAL ENGINEERING, CHEMISTRY
Academic field	MATERIALS SCIENCE, PHYSICS, ATOMIC, MOLECULAR AND CHEMICAL , PHYSICS (GENERAL)
Indexed in	Science Citation Index Expanded, Scopus
Evaluated in	SJR. SCImago Journal & Country Rank
OA polices	SHERPA/RoMEO color gray
ICDS	ISSN: 1841-7132,1841-7132,1454-4164 Está en índices de citas (Science Citation Index Expanded, Scopus) = +3.5 Está al tiempo en WoS (AHCI, SCIE o SSCI) y en Scopus (Science Citation Index Expanded, Scopus) = +1 Antigüedad = 18 años (fecha inicio: 1999) Pervivencia: $\log_{10}(18)$ = +1.3 **ICDS = 5.8**

MIAR recolecta datos para la identificación y análisis de revistas científicas. Si se introduce en la casilla de búsqueda cualquier ISSN el sistema localizará en qué bases de datos de las contempladas en la matriz está indizada la revista, esté recogida o no en MIAR, y calculará su ICDS (sin contar el Índice de Pervivencia si no forma parte de MIAR).

ICDS anuales

WEB OF KNOWLEDGE℠ | DISCOVERY STARTS HERE THOM

Sign In | Marked List (0) | EndNote | ResearcherID | Citation Alerts | Saved Searches | Log Out | Help

Web of Science | Additional Resources

Search | Author Search | Cited Reference Search | Advanced Search | Search History

Web of Science®

< < Back to results list | Record 47 of 124 | Record from Web of Science®

Add to Marked List (0)

Send to: my.endnote.com

Molecule sensing in air

Author(s): Akay, C (Akay, C.)

Source: JOURNAL OF OPTOELECTRONICS AND ADVANCED MATERIALS **Volume:** 10 **Issue:** 11 **Pages:** 3012-3015 **Published:** NOV 2008

Times Cited: **0** (from Web of Science)

Cited References: **11** [view related records] **Citation Map**

Conference: 9th International Balkan Workshop on Applied Physics **Location:** Constanta, ROMANIA **Date:** JUL 07-09, 2008

Abstract: In this work, a sensor has been constructed to detect molecules such as vapor, CO(2) stream and smoke (tobacco) in the air by using an optical device with two pair led-photodiode. The working principle of the optical device is based on blocked beams.

Accession Number: WOS:000261348200036

Document Type: Article; Proceedings Paper

Language: English

Author Keywords: Beer-Lambert law; Optoelectronic detection; Extinction; Sensor; Optical device

Reprint Address: Akay, C (reprint author)
Uludag Univ, Dept Phys, TR-16059 Gorukle, Bursa, Turkey.

Addresses:
[1] Uludag Univ, Dept Phys, TR-16059 Gorukle, Bursa, Turkey

E-mail Addresses: cenay@uludag.edu.tr

Publisher: NATL INST OPTOELECTRONICS, 1 ATOMISTILOR ST, PO BOX MG-5, BUCHAREST-MAGURELE 76900, ROMANIA

Web of Science Categories: Materials Science, Multidisciplinary; Optics; Physics, Applied

Research Areas: Materials Science; Optics; Physics

IDS Number: 378TZ

ISSN: 1454-4164

Add to Marked List (0) Send to: my.endnote.com

< < Back to results list | Record 47 of 124 | Record from Web of Science®

Times Cited: 0

Create Citation Alert

This article has been cited 0 times in Web of Knowledge.

Additional information

- View the journal's **impact factor** (in Journal Citation Reports®)

Suggest a correction

If you would like to improve the quality of the data in this record, please suggest a correction.