

BdKCSE'2017
Big Data, Knowledge and Control Systems Engineering

Sofia, Bulgaria
7-8 December 2017

Institute of Information and Communication Technologies of the Bulgarian Academy of Sciences
"John Atanasoff" Union on Automatics and Informatics, Bulgaria
7-8 December 2017, 108 G. S. Rakovski Str., Hall 105A, 1000 Sofia, Bulgaria

Conference Chairs

- Chair – Assoc. Prof. Rumen Andreev, Bulgarian Academy of Sciences, Bulgaria
- Vice chair – Assoc. Prof. Lyubka Doukovska, Bulgarian Academy of Sciences, Bulgaria
- Vice chair – Assoc. Prof. Yuri Pavlov, Bulgarian Academy of Sciences, Bulgaria

Program Committee

- Abdel-Badeeh Salem, Ain Sham University, Egypt
- Chen Song Xi, Iowa State University, USA
- Dimiter Velev, University of National and World Economy, Bulgaria
- František Čapkovič, Slovak Academy of Sciences, Slovakia
- George Boustras, European University, Cyprus
- Georgi Mengov, University of Sofia, Bulgaria
- Jacques Richalet, France
- John Wang, Montclair State University, USA
- Kosta Boshnakov, University of Chemical Technology and Metallurgy, Bulgaria
- Krasen Stanchev, Sofia University, Bulgaria
- Ljubomir Jacić, Technical College Požarevac, Serbia
- Ljupco Kocarev, Macedonian Academy of Sciences and Arts, Macedonia
- Milan Zorman, University of Maribor, Slovenia
- Neeli R. Prasad, Aalborg University, Princeton, USA
- Olexandr Kuzemin, Kharkov National University of Radio Electronics, Ukraine, and German Academic Exchange Service, Bonn, North Rhine-Westphalia, Germany
- Peđa Milosavljević, University of Niš, Serbia
- Peter Kokol, University of Maribor, Slovenia
- Petko Ruskov, Sofia University, Bulgaria
- Radoslav Pavlov, IMI, Bulgarian Academy of Sciences, Bulgaria
- Rumen Nikolov, UniBIT-Sofia, Bulgaria
- Song II-Yeol, Drexel University, USA
- Sotir Sotirov, University "Prof. Asen Zlatarov", Bulgaria
- Tomoko Saiki, Tokyo Institute of Technology, Japan
- Uğur Avdan, Anadolu University, Turkey
- Valentina Terzieva, IICT, Bulgarian Academy of Sciences, Bulgaria
- Valeriy Perminov, National Research Tomsk Polytechnic University, Russia
- Vera Angelova, IICT, Bulgarian Academy of Sciences, Bulgaria
- Vyacheslav Lyashenko, Kharkov National University of Radio Electronics, Ukraine
- Wojciech Piotrowicz , University of Oxford, UK
- Zlatogor Minchev, IICT, Bulgarian Academy of Sciences, Bulgaria
- Zlatolilia Ilcheva, IICT, Bulgarian Academy of Sciences, Bulgaria

Institute of Information and Communication Technologies
Bulgarian Academy of Sciences
John Atanasoff Society of Automatics and Informatics, Bulgaria
Big Data, Knowledge and Control Systems Engineering – BdKCSE'2017
7 December 2017, 1000 Sofia Rakovski str. 108, Bulgaria, Hall 105A,

7. December 2017

13:00–13:05 Opening
13:05–14:35 Plenary session "*Complex big data applications in science, engineering, medicine"*
Chair of Session: **Rumen Andreev**
13:05 – Borovska, P., Technical University of Sofia: "Big Data analytics and genetic research"
13:35 – Chikalanov, A., Nikolov, R., Petkov, J. & Petrov, Z., University of Library Studies and Information Technologies, Sofia: "A use-case driven open reference architecture for cross-domain IoT open source component based applications"

14:05 – Pavlov, Yu., IICT-BAS, Sofia: "Forest ecological management and exhaustible timber production:

Preferences based utility approach"
14:35 – 15:50 Invited Research/Industrial presentations *"Big Data Management"*
Chair of Session: **Valentina Terzieva**
14:35 – Dzhambov, V., IICT-BAS, Sofia: "Definite integrals computation with very high precision, using parallel schemas"
15:00 – Nedeltcheva, G.N.1, Shoikova, E.2, Hristova, E.1, 1Sofia University, 2University of Library Studies and Information Technologies, Sofia: "Challenges of building augmented reality applications enhanced by IoT data and Artificial Intelligence"
15:25 – Bachvarov, D.1, Ani Boneva, A.1, Baruh, N.2, Angelov, S.3, Boneva, Y.1, Ilcheva, Zl.1, Ivanova, V.4, 1IICT-BAS, 2SD "ELL – Danev, Bozhilov &" , 3OMNITEL Ltd, 4Institute of Robotics-BAS, Bulgaria: "Integrated system for managing microclimate, lighting and energy consumption in technological premises WMCS 100"
15:50 – 16:00 Coffee Break
15:40 – 17:20 Paper sessions *"Intelligent control systems and Data Management"*
Chair of Session: **Yuri Pavlov**
15:40 – Nogay, H.S.1, Akinci, T. C.2, Onal, E.2, 1Erciyes University**;** 2Istanbul Technical University**,** Turkey: "A Survey in deep convolutional neural networks for diagnosis of diseases"
16:05 – Blagoev, I., Atanasova, T. V., Zankinski, I. A., IICT-BAS, Sofia: "Dual MLP for time series forecasting with hidden layer sharings"
16:30 – Čapkovič, Fr.1, Doukovska, L.2, Atanassova, V.3, 1Institute of Informatics, Slovak Academy of Sciences; 2IICT-BAS, 3Institute of Biophysics and Biomedical Engineering-BAS, Sofia: "Petri Nets in modelling of supervisor based agent cooperation"
16:55 – Atanasova, M. I.1, Atanasova, T. V.2, 1Sofia University; 2IICT-BAS, Sofia: "Key drivers and main challenges for renewable energy in telecommunications"
17:20 – 18:35 Paper sessions *"Big Data Applications"*
Chair of Session: **Svetozar Ilchev**
17:20 – Onal, E.1, Akinci, T. C.1, Seker, S.1, Nogay, H.S.2, 1Istanbul Technical University; 2Erciyes University, Turkey: "A study about reliability assessment of power system"
17:45 – Todorova, K., Terzieva, V., Kademova-Katzarova, P., IICT-BAS: „Trends and challenges of Big Data: A review"
18:10 – Gaidarski, I., Kutinchev, P., IICT-BAS, Sofia: "Holistic approach to data protection – identifying the weak points in the organization"
18:35 – 19:00 Panel discussion *"Variety of data contributing to the Big Data challenges*
19:00 Closing

A Study about Reliability Assessment of Power System

[1]Emel Onal, [2]Tahir Cetin Akinci, [3]Serhat Seker, [4]Hidir Selcuk Nogay

[1, 2, 3] Istabul Technical Universtiy, Department of Electrical Engineering
Istanbul, Turkey
[4] Erciyes University, Mustafa Cikrikcioglu Voctional College
Kayseri, Turkey
eonal@itu.edu.tr, akncitc@itu.edu.tr, eonal@itu.edu.tr, nogay@erciyes.edu.tr

Abstract: Reliability Evaluation involves calculating reliability indices which are a measure of reliable of a system. This evaluation is important for electric utilities since it can show important information about the functioning of the power system. In this report it is aimed to evaluate the reliability of the power systems. The electrical power system reliability can be defined as the degree to which the performance of the elements in the bulk system results in electricity being delivered to customers within accepted standards and in the amount desired. There are software such as DigSilent, Neplan and any other possible solution. In this study, DigSilent software is used for reliability analysis. First a simple network is analyzed then a 96 Bus power system is used to demonstrate results. As a result, load flow analysis gives more realistic results according to connectivity analysis. Finally, for further study suggestion an introduction about multi objective optimization is presented and one of the heuristic methods called the non-dominated sorting genetic algorithm 2(NSGA II) and its codes in Matlab for a object function is presented.

Keywords: Connectivity analysis, Digsilent software, load flow analysis, multi objective optimization, reliability.

1 Introduction

Reliability in general can be defined as the ability of a device or system to perform its required function under stated conditions for a stated period of time or number of cycles or events. Due to the ability of a power system to operate with contingencies, it can be said that the reliability of a power system is the ability of the system to perform its main function. The main function of a power system is to supply electrical energy to its customers. Reliability can further be divided into two parts, adequacy and security. Adequacy is having enough facilities in the system to meet the demands of the customer loads. The facilities referred to are generation, transmission and distribution facilities. Security is the ability of the system to

respond to disturbances. The distribution system is the part of the power system that takes the power from the transmission system to the customer. Distribution systems are usually configured as radial type systems, if not they are operated as such. A radial distribution system consists of a set of series components including lines, isolators, circuit breakers, bus-bars etc. Reliability assessment involves determining, generally using statistical methods, the total electric interruptions for loads within a power system during an operating period. Reliability assessment tools are commonly used to quantify the impact of power system equipment outages in economic terms. The results of a reliability assessment study may be used to justify investment in network upgrades such as new remote control switches, new lines /transformers, or to assess the performance of under voltage load shedding schemes. The basic user procedure for completing a reliability assessment consists of the following steps as shown in Figure 1. Steps on the left are compulsory, while steps on the right are optional and can be used to increase the detail of the calculation.

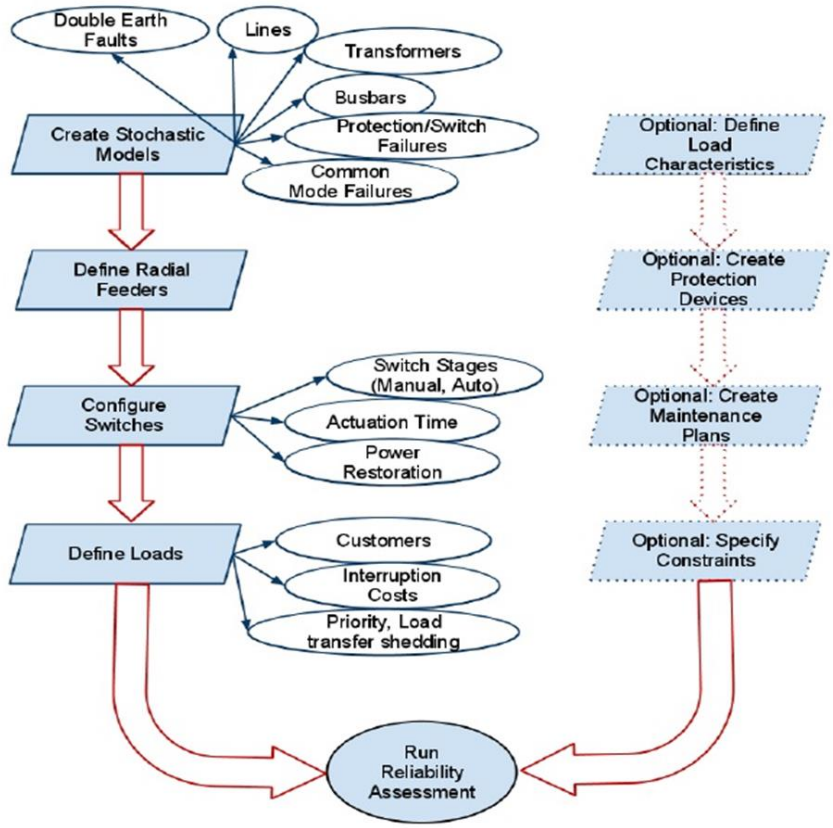

Figure 1. Reliability Assessment User Procedure

2 The indices of Reliability Assessment

The Reliability Assessment procedure considers the network topology, protection systems, constraints and stochastic failure and repair models to generate reliability indices. The generation of reliability indices, using the Reliability Assessment tool also known as 'reliability analysis', consists of the following: The failure models describe how system components can fail, how often they might fail and how long it takes to repair them when they fail. The load models can consist of a few possible load demands, or can be based on a user defined load forecast and growth scenarios.

The combination of one or more simultaneous faults and a specific load condition is called a 'system state'. Internally, DigSilent system state generation engine uses the failure models and load models to build a list of relevant system states [1]. Subsequently, the Failure Effect Analysis (FEA) module analyzes the faulted system states by simulating the system reactions to faults. The objective of the FEA function is to determine if system faults will lead to load interruptions and if so, which loads will be interrupted and for how long. The results of the FEA are combined with the data that is provided by the system state generation module to create the reliability statistics including indices such as SAIFI, SAIDI and CAIFI. The system state data describes the expected frequency of occurrence of the system state and its expected duration however, the duration of these system states should not be confused with the interruption duration.

The network reliability assessment produces two types of indices: Load point indices and System indices. These indices are separated into frequency/expectancy indices and energy indices. Furthermore, there are indices to describe the interruption costs. Load point indices are calculated for each load, and are used in the calculation of many system indices. This section describes the simplified equations for the reliability indices. However, note that the DigSilent reliability assessment calculations use more complex calculation methods. Nevertheless, the simplified equations shown here can be used for hand calculations or to gain insight into the reliability assessment results [2]. (C: total custom, a: annual, h: hour)

These indices are defined as follows:

SAIFI, System Average Interruption Frequency Index, in units of [1/C/a], indicates how often the average customer experiences a sustained interruption during the period specified in the calculation

SAIFI_P, Average Interruption Frequency (Contracted Power), in units of [1/a], indicates how often there are contracted power interruptions during the period of the calculation.

CAIFI, Customer Average Interruption Frequency Index, in units of [1/a], is the mean frequency of sustained interruptions for those customers experiencing sustained interruptions. Each customer is counted once regardless of the number of times interrupted for this calculation.

ASIFI, Average System Interruption Frequency Index, in units of [1/a], the calculation of this index is based on load rather than customers affected. ASIFI can be used to measure distribution performance in areas that supply relatively few customers having relatively large concentrations of load, predominantly industrial/commercial customers.

SAIDI, System Average Interruption Duration Index, in units of [h/C/a], indicates the total duration of interruption for the average customer during the period in the calculation. It is commonly measured in customer minutes or customer hours of interruption.

SAIDI_P, Average Interruption Duration (Contracted Power), in units of [h/a], indicates the total duration of contracted power interruptions during the period of the calculation.

CAIDI, Customer Average Interruption Duration Index, in units of [h], is the mean time to restore service.

ASIDI, Average System Interruption Duration Index, in units of [h/a], is the equivalent of SAIDI but based on load, rather than customers affected.

ASAI, Average Service Availability Index, this represents the fraction of time that a customer is connected during the defined calculation period.

ASUI, Average Service Unavailability Index, is the probability of having all loads supplied.

MAIFI, Momentary Average Interruption Frequency Index, in units of [1/Ca], evaluates the average frequency of momentary interruptions. The calculation is described in the IEEE Standard 1366 ’IEEE Guide for Electric Power Distribution Reliability Indices’.

3 The Reliability Assessment Verification of Test Results for a Simple System

Firstly, a simple test system which has been built in DigSilent software in used for reliability analysis and the reliability indexes are extracted for different conditions of failure in system. The simple electrical distribution system is shown in figure 2.

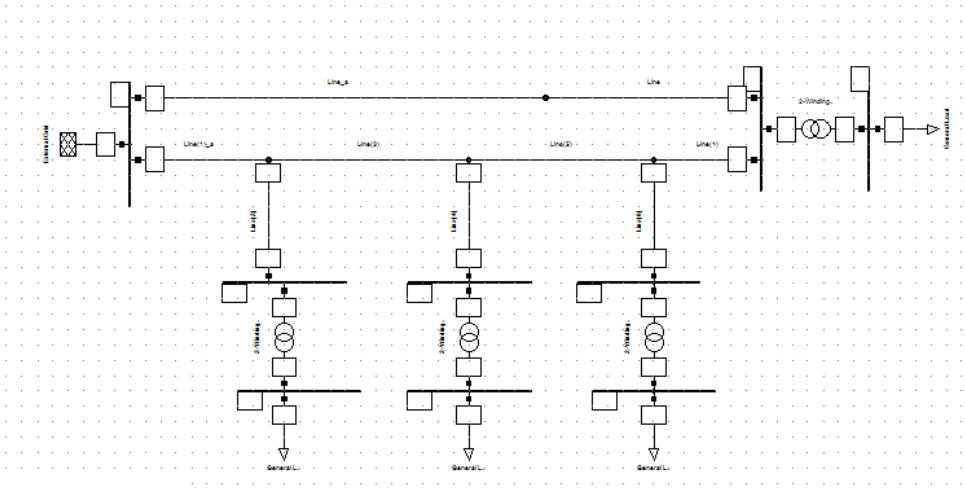

Figure 2. The Simple Test System for Electric Distribution System

The different assumptions in reliability analysis:

- Case 1:

The assumptions for case 1 are the following: availability of alternate feed, no fuses on the laterals, disconnects along the feeders and repaired transformers.

Table 1. The Reliability System Index for case 1

Index	SAIFI	SAIDI	CAIDI	ASAI	ASUI	ENS	AENS
Value	0.6568	5.9632	8.0212	0.9996	0.0007	19.3256	0.0145

- Case 2:

For case 2 the assumptions are: no alternate feed, fuses on the laterals, circuit breakers instead of disconnects long the feeders and repaired transformers.

Table 2. The Reliability System Index for case 2

Index	SAIFI	SAIDI	CAIDI	ASAI	ASUI	ENS	AENS
Value	0.2312	3.9862	18.2130	0.9995	0.0002	15.2361	0.0254

- Case 3:

Case 3 has the following assumptions: availability of alternate feed, fuses on the laterals, no disconnects along the feeders and repaired transformers.

Table 3. The Reliability System Index for case 3

Index	SAIFI	SAIDI	CAIDI	ASAI	ASUI	ENS	AENS
Value	0.3125	4.7652	15.5227	0.9992	0.0005	16.4568	0.0126

- Case 4:

The following are the assumptions for case 4: availability of alternate feed, fuses on the laterals, disconnects along the feeders and repaired transformers.

Table 4. The Reliability System Index for case 4

Index	SAIFI	SAIDI	CAIDI	ASAI	ASUI	ENS	AENS
Value	0.3256	3.6458	12.3687	0.9997	0.0006	11.2365	0.0111

- Case 5:

Assumptions for case 5: no alternate feed, fuses on the laterals, disconnects and the transformers are replaced instead of being repaired.

Table 5. The Reliability System Index for case 5

Index	SAIFI	SAIDI	CAIDI	ASAI	ASUI	ENS	AENS
Value	0.3269	1.2356	4.2333	0.9996	0.0005	7.2355	0.0065

4 The Reliability Assessment of Test Results for a Medium Voltage Distribution System with 96 bus

Now, reliability analysis of is done in medium voltage 33kv/11kv distribution power system (Figure 3). First step in reliability analysis in power system is to define a stochastic (reliability) model for every element in power system and use the necessary data are entered for reliability analysis. Afterwards, nest step is defining feeders in power system and then, regulating the switches and lads for reliability analysis. According to that, it’s possible to model various types of demands, costs, faults, planned outage in power system and reliability analysis.

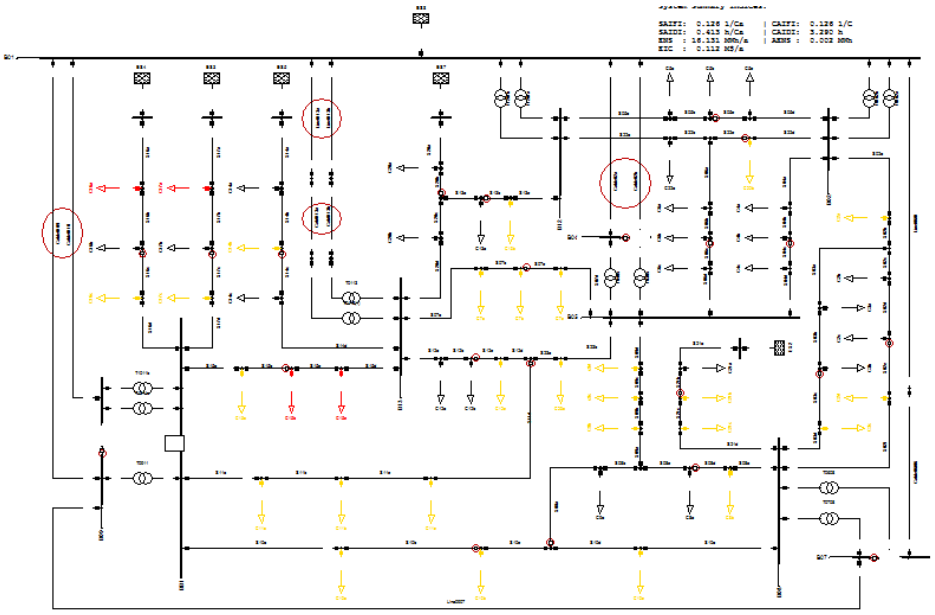

Figure 3. The electrical distribution system with 96 bus

There are mainly two different methods in the reliability analysis of power system in DigSilent. These are the connectivity analysis and the load flow analysis.

In connectivity analysis, the main defect is neglecting the power system limitation and voltage limitations in it. Being that, it is assumed the load is feed only when it is connected to network. As a result, no loading and bus voltage limitations for elements is considered in this method. So that the load flow calculation is for reliability analysis is unnecessary in this method and the burden of the calculations are decreased dramatically but this can cause faults in the results or even make them far from the real state[3].

The difference of the load flow analysis from the connectivity analysis is at following. In this method, all of the operational limits of power system such as load shedding, thermal limits in load transfer approaches, bus voltage limits and so on, are considered. So that, the load flow analysis is unavoidable in every reliability analysis. [4]

As can be seen from the experimental results, the flow analysis is superior to the connectivity analysis.

Table 6 and Table 7 show the reliability indices for the medium-voltage electrical distribution network with 96 bus. The results obtained using the Digsilent program are quite different each other.

Table 6. The Results of Connectivity Analysis for the Distribution System with 96 bus

		DIgSILENT PowerFactory 15.1.7	Project: Date: 5/8/2017

Reliability Assessment

Method	Connectivity analysis			
Network	Distribution (Optimal Power Restoration)			
Calculation time period	2016			
Consider Maintenance	No			
Fault Clearance Breakers	Use all circuit breakers			
Switching procedures	Concurrently			
Consider Sectionalizing (Stages 1-3)	Yes			
Time to open remote controlled switches	1.00 min.			
Automatic Contingency Definition				
Selection	Whole System			
Busbars / terminals	Yes	Common mode		No
Lines / cables	Yes	Independent second failures		No
Transformers	Yes	Double earth faults		No
		Protection/switching failures		No

Study Case: Reliability — Annex: / 1

System Summary

System Average Interruption Frequency Index	SAIFI	=	0.424291	1/Ca
Customer Average Interruption Frequency Index	CAIFI	=	0.424291	1/Ca
System Average Interruption Duration Index	SAIDI	=	0.785	h/Ca
Customer Average Interruption Duration Index	CAIDI	=	1.849	h
Average Service Availability Index	ASAI	=	0.9999104346	
Average Service Unavailability Index	ASUI	=	0.0000895654	
Energy Not Supplied	ENS	=	30.646	MWh/a
Average Energy Not Supplied	AENS	=	0.003	MWh/Ca
Average Customer Curtailment Index	ACCI	=	0.029	MWh/Ca
Expected Interruption Cost	EIC	=	0.217	M$/a
Interrupted Energy Assessment Rate	IEAR	=	7.090	$/kWh
System energy shed	SES	=	0.000	MWh/a
Average System Interruption Frequency Index	ASIFI	=	0.424282	1/a
Average System Interruption Duration Index	ASIDI	=	0.784576	h/a
Momentary Average Interruption Frequency Index	MAIFI	=	0.000000	1/Ca

Table 7. The Results of Load Flow Analysis for the Distribution System with 96 bus

		DIgSILENT PowerFactory 15.1.7	Project: Date: 5/8/2017

Reliability Assessment

Method	Load flow analysis			
Network	Distribution (Optimal Power Restoration)			
Calculation time period	2016			
Consider Maintenance	No			
Fault Clearance Breakers	Use all circuit breakers			
Switching procedures	Concurrently			
Consider Sectionalizing (Stages 1-3)	Yes			
Time to open remote controlled switches	1.00 min.			
Automatic Contingency Definition				
Selection	Whole System			
Busbars / terminals	Yes	Common mode		No
Lines / cables	Yes	Independent second failures		No
Transformers	Yes	Double earth faults		No
		Protection/switching failures		No

Study Case: Reliability — Annex: / 1

System Summary

System Average Interruption Frequency Index	SAIFI	=	0.487638	1/Ca
Customer Average Interruption Frequency Index	CAIFI	=	0.487638	1/Ca
System Average Interruption Duration Index	SAIDI	=	27.583	h/Ca
Customer Average Interruption Duration Index	CAIDI	=	56.565	h
Average Service Availability Index	ASAI	=	0.9968512415	
Average Service Unavailability Index	ASUI	=	0.0031487585	
Energy Not Supplied	ENS	=	1077.364	MWh/a
Average Energy Not Supplied	AENS	=	0.103	MWh/Ca
Average Customer Curtailment Index	ACCI	=	1.009	MWh/Ca
Expected Interruption Cost	EIC	=	8.713	M$/a
Interrupted Energy Assessment Rate	IEAR	=	8.088	$/kWh
System energy shed	SES	=	0.000	MWh/a
Average System Interruption Frequency Index	ASIFI	=	0.487627	1/a
Average System Interruption Duration Index	ASIDI	=	27.582283	h/a
Momentary Average Interruption Frequency Index	MAIFI	=	0.000000	1/Ca

5 The Multi Objective Optimization

The presence of multiple objectives in a problem, in principle, gives rise to a set of optimal solutions (largely known as Pareto-optimal solutions), instead of a single optimal solution. In the absence of any further information, one of these Pareto-optimal solutions cannot be said to be better than the other. This demands to find as many Pareto-optimal

solutions as possible from the user. Classical optimization methods (including the multi criterion decision-making methods) suggest converting the multiobjective optimization problem to a single-objective optimization problem by emphasizing one particular Pareto-optimal solution at a time. Over the past decade, a number of multiobjective evolutionary algorithms (MOEAs) have been suggested [5-7]. The one of the most effective of these algorithms is Non-dominated Sorting Genetic Algorithm II (NSGA II). It is a very effective algorithm but has been generally criticized for its computational complexity, lack of elitism and for choosing the optimal parameter value for sharing parameter. One of the evolutionary algorithms is pareto front optimal solutions in one single simulation run. In this study, the codes are written in Matlab software and the results are tested in a object functions. These are the values are in contradiction with each other and optimizing one of them spoils the other one. So instead of one optimized point there is a group of the points (continuous) that no one has any prominence to other one. As a result, for a simple power system, one of the functions (f_1) can be the cost of the changing or repairing the elements in the networks and the other one (f_2) can be the outage period or number of the loads that can be disconnected. The implementation is adapted in two abjectives. For example, one of both can be SAIFI index the other one can be loss power. Here, there is no unique solution. The pareto front optimal solution presents an extensive solution set. The relationship between the number of interruptions and active power loss in a system is one of the most important criteria of optimization. Here, the weak points can be eliminated. In conclusion, this optimization offers many options. Figure 4 offers these possibilities.

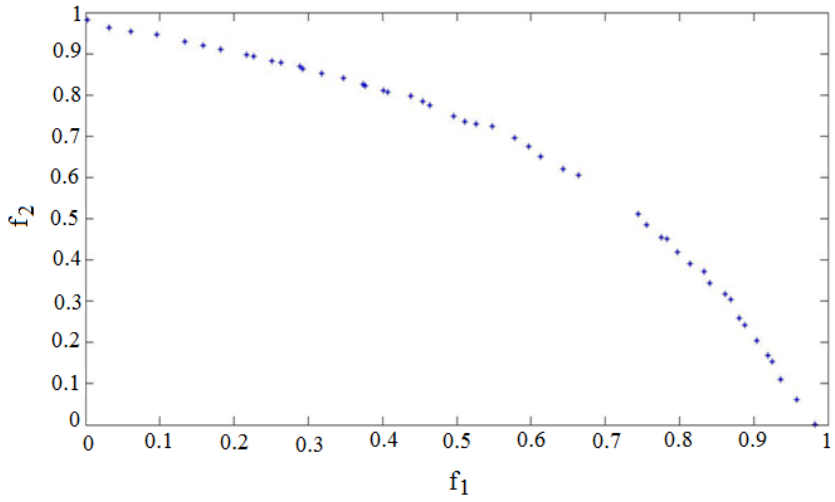

Figure 4. The Pareto front optimal solution for test results

6 Conclusions

In this study, reliability analysis of power systems is done and the necessary data are extracted through DigSilent software. These data can be used for future programming and economic expansion of the power grids. Besides, the multi objective optimization is introduced and one of its methods called NSGA II is programmed and the results are presented. It is possible to combine this optimization for further studies and the results that extracted from the reliability to gain optimal future condition assessment of the network and establishing new equipment in power systems. In this study, reliability analysis indices of radial electrical distribution system have been calculated by using the connectivity analysis load flow analysis. When these results based on system limits are compared, it is shown that load flow analysis gives more realistic results.

References

[1] *DigSilent Power Factory V.15 Tutorial*. (2014), DIgSILENT GmbH.

[2] Suthapanun C., Jirapong P., Bunchoo P.,Thararak P. (2015) Reliability assessment tool for radial and loop distribution systems using DIgSILENT PowerFactory, *12th International Conference on Electrical Engineering/Electronics, Computer, Telecommunications and Information Technology (ECTI-CON)*, Thailand, 212-225.

[3] Ngaopitakkul N., Pothisarn C., Bunjongjit S., Suechoey B., Thammart C., Nawikavatan A**.** (2013) A Reliability Impact and Assessment of Distributed Generation Integration to Distribution System. *Energy and Power Engineering*, 5, 1043-1047.

[4] Mokoka O.K.P., Awodele K.O. (2013) Reliability Evaluation of distribution networks using Neplan & Digsilent power factory, *IEEE Africon conference*.

[5] Deb K., Pratap A., Agarwal S., Meyarivan T.(2002) A fast and elitist multiobjective genetic algorithm: NSGA-II. *IEEE Transactions on Evolutionary Computation*, 6, 2, 182-197.

[6] Yijie S., Gongzhang S. (2008) Improved NSGA-II Multi-objective Genetic Algorithm Based on Hybridization-encouraged Mechanism. *Chinese Journal of Aeronautics*, 21, 6, 540-549.

[7] Tomoiagă B., Chindriş M., Sumper A., Sudria –Andreu A., Villafafila-Robles R. (2013) Pareto Optimal Reconfiguration of Power Distribution Systems Using a Genetic Algorithm Based on NSGA-II, *Energies* 6, 1439-1455.