PREDICTION OF COIL PITCHES ANGLES IN SQUIRREL CAGE INDUCTION MOTORS USING BY SUPPORT VECTOR MACHINES

H. Selcuk NOGAY

Kayseri University, Mustafa Cikrikcioglu Vocational College, Kayseri / Türkiye

Abstract: Coil pitch angles have an important place in the design of rotary electrical machines. When the stator windings of induction motors are wound with shortened coil pitch, some low level harmonics can be suppressed. Therefore, determining the pitch angle of the coil can be considered an important step in induction motor design. In the design process, this stage can be handled by mathematical calculation, but the parameters of each motor can be different and therefore, current and voltage harmonics may also be different, so it is necessary to make separate calculations for each motor. In this study, in order to find a solution to this problem, the coil pitch angles of three-phase cage induction motors were estimated with support vector machines, a popular artificial intelligence method and classifier, and tested with a ten fold cross-validation technique. As a result, an SVM estimation model has been developed that can estimate the coil pitch angle with minimum error without the need for a mathematical model of an induction motor fed by a PWM inverter. The data used in the system have been obtained experimentally, all five three-phase cage asynchronous motors used in the experiment are identical, have the same coil lengths, have windings wound at different coil pitch, all have the same power, and finally all are four poles. This study is also a unique source of information and application that can be used in active filter design, motor design, and winding design.

Keywords: Coil Pitches Angles, Induction Motors, Optimizable Support Vector Machines (SVM), Sinuzoidal PWM (SPWM)

INTRODUCTION and THEORETICAL FRAMEWORK

Induction motors have been one of the indispensable elements of the industry for decades. Today, a significant amount of electrical energy in the sector is consumed by induction motors fed by PWM inverters. PWM inverters used in the feeding of induction motors can cause the formation and increase of voltage and current harmonics. Similarly, another reason for the increase of harmonics is the stator winding structure and coil pitch. Induction motors are generally driven by sinusoidal PWM (SPWM) inverter drives in the industry (Birbir and Nogay, 2007). Since the induction motors is a load fed by the grid voltage, it is very important for the operation performance of the induction motor that the grid voltage is a harmonic-free sinusoidal voltage. Because the PWM inverter to be applied to the stator windings of the induction machine causes harmonics and thus losses due to changes in the switching frequencies of the semiconductor switching power elements (Birbir and Nogay, 2007). Another factor related to harmonics in induction motors is the stator winding structure. There are different types of stator winding constructions but two layer windings are the most preferred. It is known that magnetic harmonic fields and related losses can be reduced by changing coil pitch angles in two layer windings. In induction motors with harmonics, even if the source of the harmonic is an inverter or something else, some single-order low-level harmonics can be suppressed by changing the coil pitch angle or coil pitch. Conversely, the source of harmonics may be the coil pitch. In order to understand this, firstly, it is necessary to determine the coil pitch that causes harmonics or to make a classification for this purpose.

After the introduction and theoretical framework section of the study, the remaining sections are designed as follows.

In this study, a model that determines and classifies the bobbin pitch using the optimized support vector machines (SVM) method, one of the popular machine learning methods, is developed and applied. After the introduction and theoretical framework section of the study, the remaining sections are designed as follows. The second section consists of the purpose of the study. In the third section, the comprehension of the study and the scientific studies carried out in the state of the art within this content are examined. In the fourth section, the method of the study, obtaining the data and designing the model are explained. In the fifth section the numerical and graphical results obtained from the study are presented. In the sixth that is last section, the conclusions are given.

PURPOSE of the STUDY

In this study, it is aimed to design and test a SVM machine learning model to determine the stator coil pitch angles, taking into account the phase-neutral and interphase supply voltages and currents, switching frequencies of the inverter, low level harmonics of current and voltage, active, reactive and apparent powers and power coefficients in three-phase squirrel cage induction motors powered by a PWM inverter.

INSIGHT and RELATED STUDIES

In rotating electrical machines, stator winding design plays a very important role in their overall performance (Silva et al. 2019). Recent studies have presented new approaches for winding design optimization, including multilayer configurations, stator shifting, and phase shifting. The effect of shortened or fractional coil pitches on motor performance in induction motors has been known for over a hundred years (Adams et al. 1907). We have presented some studies to the literature in order to reveal how the winding pitch affects the total current harmonics (Birbir et al. 2007a: Birbir et al. 2007b), low level odd current harmonics (Birbir et al. 2008), voltage harmonics and total harmonic distortion (Birbir and Nogay, 2007a), harmonic changes (Birbir and Nogay, 2007b). Current and voltage harmonics occurring in induction motors affect the iron and copper losses of the motor and may also cause torque oscillations in the motor (Nogay, 2011). In addition, when two-layer full coil winding is used, the effects of the increase in internal temperature in terms of insulation level are among the studies that take place in the literature (Nogay, 2008). Also, it has been demonstrated in another study that the shape of the slot in which the stator windings are placed in induction motors changes the winding structure, resulting in a negative effect on motor losses and performance with the effect of minimal change in the winding turn length (Nogay et al. 2012). Even in identical asynchronous motors manufactured by different companies despite having the same power, some harmonization differences can be observed with the effect of some winding structure and slot shape differences (Nogay and Birbir 2007: Nogay and Birbir 2008).

Some scientific studies in the last decade have also used partial parallel winding to soft start the three-phase squirrel-cage asynchronous motor (Cistelecan et al 2009) and the optimum coil pitch to minimize the noise due to (spatial) harmonics in the air gap between the stator and the rotating magnetic field. (Correia et al. 2020: Silva et al._2018: Tessarolo et al. 2010). In another study, it was concluded that the

performance of an induction motor with shortened coil pitch can be improved with variable PWM switching frequency (Deshmukh et al. 2006). In another study, the coil pitch of an induction motor for electric vehicle applications is analyzed by the finite element method (Gundogdu et al. 2020). In another study, it was concluded that the leakage inductance value due to current harmonics can be reduced by using the full coil pitch in induction machines with double stator windings (Hadiouche et al. 2004).

METHODOLOGY

Obtaining the data set

Five identical three-phase cage asynchronous motors with shortened coil pitches were used in the study. Coil pitches are 1-10, 1-9, 1-8, 1-7 and 1-6. The 1-10 coil pitch has 180° pitch angle. Each motor is wound by reducing the coil pitch angle by 20° degrees. Although there is a shortening of pitch in motors, there is no change in the length of the total conductor since the coil length used for the tour is not shortened. Label values of induction motor (IM) are given in Table 1 below.

Table 1. Label values of the IM

Voltage (V)	Frequency (Hz)	Current (A)	Power (Kw)	Cosϕ	Speed (rpm)
Δ 220	50	4,7	1,1	0,80	1380
Y 380	50	2,7	1,1	0,80	1380

In the experimental application whose connection diagram is shown in Figure 1, the three-phase voltage first feeds the alternating current (AC) driver that is SPWM. The three phase conductors are connected from the driver to the current inputs of the power analyzer and from the power analyzer to the induction motor. The power analyzer and the computer communicate through RS485 converter. During the experimental application, the data recorded in the power analyzers own memory was transferred to the computer via Modbus communication protocol. Squirrel-cage, three-phase induction motors fed by SPWM are loaded with an electromagnetic brake unit. At each load current level, phase voltages and phase currents, active power, reactive power, apparent power and harmonics were measured by a single power analyzer. The data received were transferred to the computer with a sampling time of 1 second via RS485 converter. This process is repeated for each switching frequency of SPWM (1-15 hz) and for each motor. The data set consists of a total of 1500 data, 300 for each coil pitches, 26 inputs and one output.

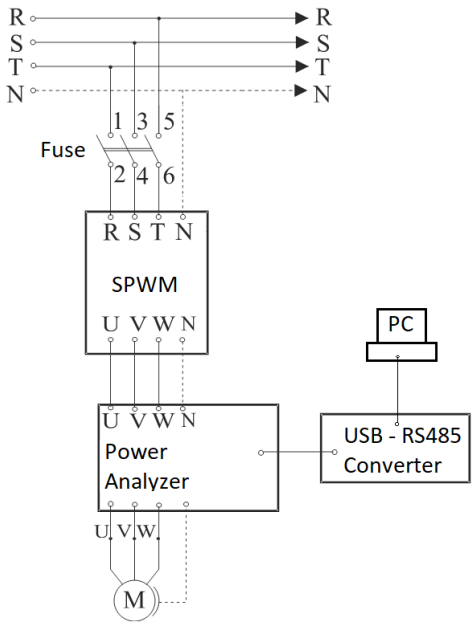

Figure 1. IM connection diagram for experimental application

Support Vector Machines (SVM) Model

The support vector machine is a vector space-based machine learning method that finds a decision boundary between the two classes farthest from any point in the training data. The working principle of the SVM machine learning algorithm is to define the sub-plane that can distinguish between two or more classes optimally. In this study, the optimizable SVM model was designed and applied with the Classification Learner toolbox in MATLAB environment. For the design of the SVM model, 26 inputs and one output were selected, SVM "optimizable" mode and 10 fold cross-validation mode were preferred.

RESULTS

After the training process of the SVM model is completed, the test result obtained with 10-fold cross validation is shown in Table 2. According to this table, coil pitch angle classification was realized with an accuracy of 99.1%.

Table 2. Testing Results of the optimzable SVM model

Accuracy (%)	**Prediction Speed (obs/sec)**	**Training Time**	**Iteration**
99.1	24.000	1056.7	30

It is possible to examine the detailed classification results obtained from the SVM model for each coil pitch angle through the confusion matrix shown in Figure 2. According to the confusion matrix, 100 degrees coil pitch angle was estimated with 100% success, and 180 degrees, which is the full pitch, was estimated with 98.3% accuracy.

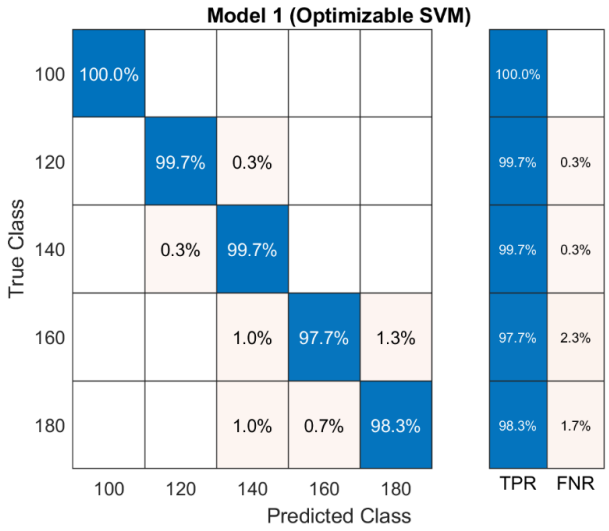

Figure 2. Confusion matrix obtained from the Optimizable SVM model

Figure 3 shows the minimum error observed with the optimizable SVM model designed for classification. The error is the square mean error between the outputs from the SVM model and the desired targets.

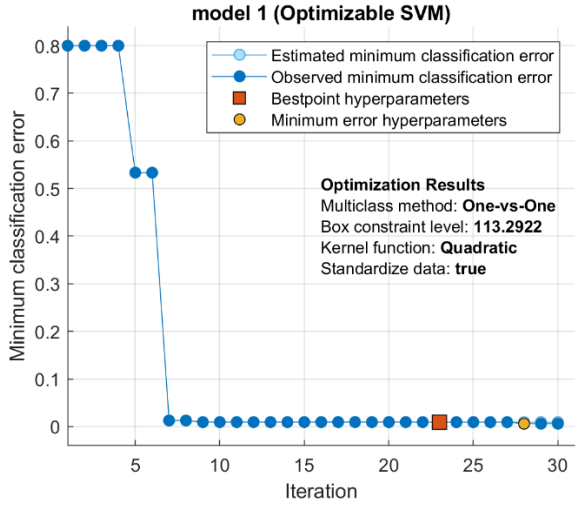

Figure 3. Minimum classification error graph

In Figure 4, a scotter plot for each coil pitches angles and predicted values are shown, with X axis L1 phase-neutral voltage, Y axis L1 phase current. Figure 5 shows the receiver operating characteristic" (ROC) curves obtained for the shortest and most normal two coil angles. These results confirm all the results obtained previously as point distribution, graphically and matrix.

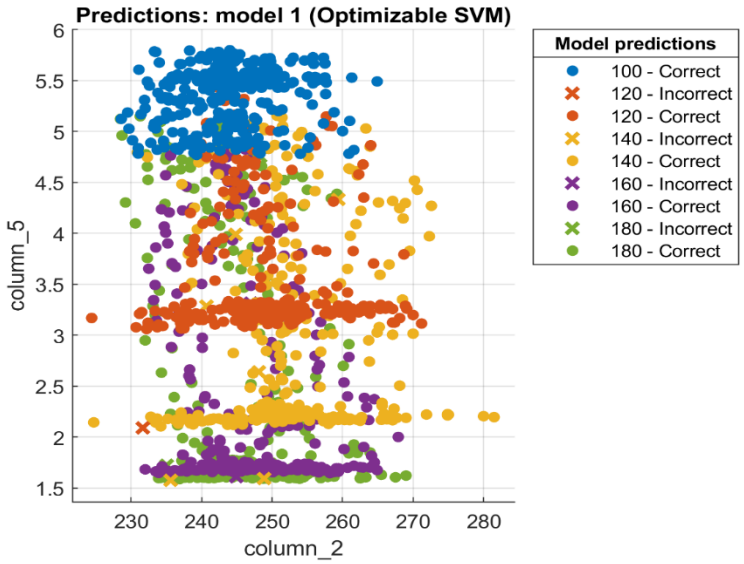

Figure 4. Scotter plot for each coil pitches angles

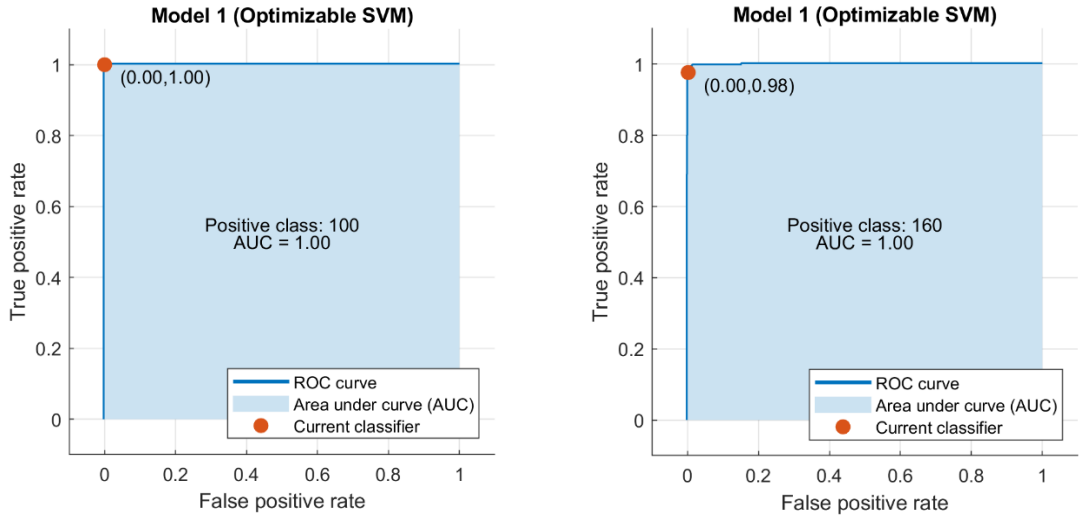

Figure 5. ROC curves of the coil pitches 100^0 and 160°

CONCLUSION

In this study, coil pitch angles are classified with the optimizable SVM model. According to the classification results, 180° were estimated with 98.3%, 160^0 97.7%, 140^0 99.7%, 120^0 99.7% and 100^0 100% accuracy. As a result, the classification and prediction application made with the optimizable SVM model was tested with 10-fold cross-validation and the three-phase cage induction motor coil pitches angles were predicted with an extremely successful accuracy rate. It has been revealed that SVM model, one of the most popular machine learning methods, can be used to contribute to three-phase cage induction motor design and winding design. Considering that proper adjustment of the coil pitch in induction motors or the appropriate winding structure can reduce copper losses and torque oscillations due to harmonics, the importance of high accuracy rates obtained with this prediction model is understood more clearly.

REFERENCES

Birbir, Y., Nogay, H. S., (2007). Harmonic Variations in Three-phase Induction Motors Fed by PWM Inverter with Different Stator Coil Pitches. Proceedings of the 6th WSEAS International Conference on Applications of Electrical Engineering, Istanbul, Turkey, May 27-29, 2007: 195-199.

Silva, A. M., Antunes, C. H., Mendes, A.M.S., Ferreira, F. J. T. E., (2019). Extended Multiobjective Optimization of Stator Winding Design. *IEEE Transactions on Energy Conversion*, 34 (4): 1-10.

Adams, C. A., Cabot, W. K., Irwing G. A., (1907). Fractional Pitch Winding For Induction Motors. *Proceedings of the American Institute of Electrical Engineers*, 26 (8): 1245-1263.

Birbir, Y., Nogay, H. S., Taskin, S., (2007a). Prediction of Current Harmonics in Induction Motors with Artificial Neural Network. International Aegean Conference on Electrical Machines and Power Electronics, (ACEMP'07), Muğla, Turkey, pp.123-129.

Birbir, Y., Nogay, H. S., & Özel, Y., (2007b). Neural Network Solution to Low Order Odd Current Harmonics in Short Chorded Induction Motors. *Int. J. of Systems Applications, Engineering & Development* , vol.1, 21-28.

Birbir, Y. NOĞAY, H. S. And Özel, Y. (2008). Estimation of Low Order Odd Current Harmonics in Short Chorded Induction Motors Using Artificial Neural Network. 9th WSEAS Int. Conf. on Neural Networks (NN' 08) , Sofya, Bulgaria, pp.387-394.

Birbir, Y. and Nogay, H. S. (2007a). Estimation of Total Harmonic Distortion in Short Chorded Induction Motors Using Artificial Neural Network. 6th WSEAS Int. Conf. on Applications of Electrical Engineering , İstanbul, Turkey, pp.261-267.

Birbir, Y. and Nogay, H. S. (2007b). Voltage and Current Harmonic Variations in Three- Phase Induction Motors with Different Stator Coil Pitches. *Internationa Jorunal of Energy*, vol.4, pp.122-129.

Nogay, H. S. (2011). Prediction of internal temperature in stator winding of three-phase induction motors with ann. *European Transactions on Electrical Power*, vol.21, pp.120-128.

Nogay, H. S., (2008). A Neural Network Solution to Design Dual Stator Winding Insulation Level Detector for Three Phase Induction Motors. *WSEAS Transactions on Advances in Engineering Education* , vol.10, 234-240.

Nogay, H. S. , Akinci, T. C. , & Guseinoviene, E., (2012). Determination of effect of slot form on slot leakage flux at rotating electrical machines by the method of artificial neural networks. *Energy Education Science and Technology Part A-Energy Science and Research*, vol.29, 451-462.

Nogay, H. S., and Birbir, Y., (2007). Application of Artificial Neural Network for Harmonic Estimation in Different Produced Induction Motors. Int. J. of Circuits, Systems and Signal Processing , vol.4, 334-340.

Nogay, H. S., and Birbir, Y., (2008). Designation of harmonic estimation ANN model using experimental data obtained from different produced induction motors . 9th WSEAS International Conference on Neural Networks (NN 08) (pp.198-201). Sofija, Bulgaria

Cistelecan, M.V., Cosan H. B., and Popescu, M., (2009). Part-winding starting improvement of three-phase squirrel-cage induction motor. 8th International Symposium on Advanced Electromechanical Motion Systems & Electric Drives Joint Symposium, Lille, 2009, pp. 1-6, doi: 10.1109/ELECTROMOTION.2009.5259141.

Correia, A. F. M., Silva, A. M., and F. J. T. E. Ferreira, F. J. T. E., (2020). Experimental Study on the Impact of MMF Spatial Harmonics in the Mechanical Vibration of a Three-Phase Induction Motor, 2020 International Conference on Electrical Machines (ICEM), Gothenburg, 2020, pp. 1560-1566, doi: 10.1109/ICEM49940.2020.9271001.

Silva, A. M., Ferreira, F. J. T. E., Falcão, G., and Rodrigues, M., (2018). Novel Method to Minimize the Air-Gap MMF Spatial Harmonic Content in Three-Phase Windings, 2018 XIII International Conference on Electrical Machines (ICEM), Alexandroupoli, 2018, pp. 2504-2510, doi: 10.1109/ICELMACH.2018.8507206.

Tessarolo, A., Mezzarobba M., and Contin, A., (2010). A stator winding design with unequally-sized coils for adjusting air-gap space harmonic content of induction machines, The XIX International Conference on Electrical Machines - ICEM 2010, Rome, 2010, pp. 1-7, doi: 10.1109/ICELMACH.2010.5608286.

Deshmukh, R., Moses, A. J., and Anayi, F., (2006) Improvement in Performance of Short Chorded Three-Phase Induction Motors With Variable PWM Switching Frequency. *IEEE Transactions on Magnetics*, vol. 42, no. 10, pp. 3452-3454, Oct. 2006, doi: 10.1109/TMAG.2006.879082.

Gundogdu, T., Zhu Z. Q., and Mipo, J.C., (2020). Analysis of coil pitch in induction machines for electric vehicle app.,lications, in *IET Electric Power Applications*, vol. 14, no. 12, pp. 2525-2536, 12 2020, doi: 10.1049/iet-epa.2019.0980.

Hadiouche, Razik, D.H., and Rezzoug, A., (2004). On the modeling and design of dual-stator windings to minimize circulating harmonic currents for VSI fed AC machines," in IEEE Transactions on Industry Applications, vol. 40, no. 2, pp. 506-515, March-April 2004, doi: 10.1109/TIA.2004.824511.