Iğdır Üniversitesi Fen Bilimleri Enstitüsü Dergisi
Iğdır University Journal of the Institute of Science and Technology

Determining Skinfold Thickness through Artificial Neural Networks

Hıdır Selçuk NOGAY[1]

ABSTRACT: Skinfold thickness values, which are used in many studies to evaluate the nutritional status of disabled people, are measured by a caliper. The usage of this measurement device in disabled people, and especially children with autism, is very difficult. The aim of this study is to find a solution to this problem by using a model that produces high accuracy predictions without needing a caliper. In this study, an artificial neural network application was realized for the determination of skinfold thickness in individuals. In order to train the artificial neural network (ANN) model, the body weights, body mass indexes, waist circumferences, abdomen circumferences, and hip circumferences of 400 children and adolescents between the ages of 6 and 18 were measured. 138 sets of the data collected from the 400 children and adolescents were selected to be used with the ANN, and a data set was formed. 70% of this data set (96 in number) was used for the training of the model, 15% (21 in number) was used for testing the model, and the remaining 15% was used for approving the model. As a result of the study, a prediction with 97.7% accuracy was obtained, and a highly close relationship between the output of the artificial neural network and the target was found.

Key words: Artificial Neural Network, Body Fat Ratio, Skinfold Thickness

Deri Kıvrım Kalınlığının Yapay Sinir Ağları ile Saptanması

ÖZET: Engellilerin beslenme durumlarını değerlendirmek amacı ile yapılabilecek bir çok araştırmada kullanılabilen deri kıvrım kalınlıkları kaliper denilen ölçü aleti ile ölçülerek elde edilebilmektedir. Engellilerde, özellikle de otizmli çocuklarda bu ölçü aletinin kullanımı oldukça zor olmaktadır. Bu çalışmanın amacı; kalipere gerek kalmadan yüksek doğrulukta tahmin üreten bir model ile bu soruna çözüm önerisi bulabilmektir. Bu çalışmada bireylerde deri kıvrım kalınlığının saptanması için bir yapay sinir ağı uygulaması gerçekleştirilmiştir. Oluşturulan yapay sinir ağı modelinin eğitilebilmesi için yaşları 6-18 yıl arasında 400 çocuk ve adolesanın vücut ağırlıkları, beden kitle endeksi, bel çevresi, karın çevresi ve kalça çevresi ölçümleri alınmıştır. 400 çocuk ve adolesandan alınan verilerin 138 i yapay sinir ağlarında kullanılmak üzere seçilmiştir ve veri seti oluşturulmuştur. Oluşturulan bu veri setinin %70 i (96 adet) modelin eğitilmesi için kullanılmış, %15 i (21 adet) modelin test edilmesi için kullanılmış ve geriye kalan %15 i ise modelin onaylanması için kullanılmıştır. Araştırmanın sonucunda % 97.7 oranında bir doğruluğa sahip bir tahmin elde edilmiş olup yapay sinir ağının çıkışı ile hedef arasında oldukça yakın bir ilişki bulunmaktadır.

Anahtar Kelimeler : Deri Kıvrım Kalınlığı, Vücut Yağ Oranı, Yapay Sinir Ağları

[1] Erciyes Üniversitesi, Mustafa Çıkrıkçıoğlu M.Y.O, Elektrik Ve Enerji, Kayseri, Türkiye
Sorumlu yazar/Corresponding Author: Hıdır Selçuk NOGAY, nogay@erciyes.edu.tr

Cilt/*Volume*: 6, Sayı/*Issue*: 3, Sayfa/*pp*: 41-48, 2016
ISSN: 2146-0574, DOI: 10.21597/jist.201621838

Geliş tarihi / *Received:* 05.02.2016
Kabul tarihi / *Accepted:* 06.05.2016

INTRODUCTION

Mental retardation is a condition that is diagnosed before the age of 18 and is characterized by insufficiency in successfully implementing daily life skills and mental function below average (Maity and Gupta, 2010). The incidence of malnutrition, being overweight, and obesity are higher in mentally disabled people compared to healthy individuals (Shabayek, 2004). Regardless, the number of studies on the subject is low. Anthropometric measurements are used in the evaluation of nutritional status. Body mass index, waist to hip ratio, waist circumference, abdomen circumference, and skinfold thickness are among the anthropometric methods used in the evaluation of obesity (Sanjay and Nadgir, 2013). The negative effects of obesity are related more to the increase in body fat ratio than body weight. Thus, the measurement of body fat ratio is a better tool in identifying risks related to obesity (Seth, 2013). Body fat ratio can be obtained by bioelectrical impedance analysis (BIA), dual-energy x-ray absorptiometry (DXA), and skinfold thickness measurements. Skinfold thickness and BIA measurements are the most widely used since measurement with those is faster (Duarte et al., 2014). Skinfold thickness measurement, which is an important method in determining body fat ratio, is performed using a caliper, and the accuracy and reliability of the results are negatively affected because of compliance issues inn mentally disabled individuals (Casey, 2013).

Artificial Neural Networking (ANN) is an information processing technology inspired by the way the human brain processes information. With ANN, the working processes of a simple biological nervous system are simulated. The simulated neurons tie to each other in various ways to form the network. These networks have the capacity to learn, memorize, and display the relationships between data. Artificial neural networks are widely used in diagnosis, imaging, identifying pathologic samples, and clinical pharmacology (Hsieh et al., 2013). The aim of this study is to realize an artificial neural network application to determine skinfold thickness in mentally disabled children without using a caliper.

MATERIAL AND METHOD

The following steps were performed in the realization of this study:

1. Measurements
2. Forming the data set
3. Forming, training, and testing the artificial neural network model
4. Result

Measurements

400 children and adolescents between the ages of 6 and 18 who applied to the children's polyclinic of the Women and Children's Hospital and agreed to participate in the study were included in the study. The body weights, heights, waist circumferences, hip circumferences, abdomen circumferences, triceps skinfold thicknesses, and subscapular skinfold thicknesses of the children were measured. Body weight was measured with thin clothes and without shoes with a scale sensitive to ± 0.1 kg and height was measured with feet together and head on a Frankfort plane. Body mass index was calculated through the formula: weight (kg)/ height2 (m2). For waist circumference the median point between the lowest rib and the crista iliac was found and the circumference passing through this point was measured. Hip circumference was measured by taking the highest point. Abdomen circumference was measured with a tape passing from the belly. Triceps skinfold thickness was measured with the measurer standing, the left arm being turned 90°, the median point between the shoulder and elbow being marked, the arm being released, going above the elbow through the epicondyles, holding the fold with the left hand and using a holtain caliper on the right hand. Subscapular skinfold thickness was measured by marking the inferior corner of the left scapula, holding with the left hand at a 45° angle and using a holtain caliper with the right hand. The skinfold thickness measurements were repeated three times and the arithmetic mean was taken.

Forming the data set

A data set in matrix form was formed from the measurements in order to be used as input and output data in the ANN model. 138 of the 400 measurements obtained were selected to be used with the ANN model. The selection was made according to the learning rate of the model. The input data matrix to be used in the ANN model was formed as 5 x 138 and the output data matrix was formed as 2 x 138. The input data used in the model were body weight, abdomen circumference, waist circumference, hip circumference, and body mass

index. The output data used in the model were triceps skinfold thickness and subscapular skinfold thickness. 15% of the data set was randomly selected to test the ANN model. 15% was selected randomly for validation. The remaining 96 data were put aside for training the ANN.

The abbreviations used in the model are given below:

BW : Body Weight

BMI : Body Mass Index

WC : Waist Circumference

AC: Abdominal Circumference

HC: Hip Circumference

TST: Triceps Skinfold Thickness (Output 1)

SST: Subscapularis Skinfold Thickness (Output 2)

Forming, training, and testing the artificial neural network model

In the study, the architecture of the ANN model was selected to be the feed forward ANN model, which is the most widely used in prediction problems. Three layers were used in this model. These layers are the input layer, the hidden layer, and the output layer. The architecture of the ANN model used in the study is shown in Figure 1. The number of neurons used in the hidden layer is 10. There is no definitive rule in the literature on the selection of the number of neurons in the hidden layer (DeLurgio, 1998). In the study, the number of neurons in the hidden layer when the ANN model gave predictions with high enough accuracy was taken into consideration. No change in the results was seen with higher numbers of neurons in the hidden layer, so no need was seen to increase the number (Hagan et al., 1996). The ANN model was formed using the MATLAB and NFTOOL package programs. The activation function used in the ANN model was a hyperbolic tangent sigmoid activation function. The data set was normalized between the [+1. -1] interval. 70% of the data set was used for training the program (96 in number). A Back propagation learning algorithm was used in training the ANN model. After the model was trained, 15% (21 in number) of the data set was used for testing and the remaining 15% was used for validation

The ANN model was trained for 11 iterations. The training continued until the error was stable, and was ended when the error didn't change. For testing, 21 data randomly selected from the 138 data were given to the ANN model and outputs were calculated. The linear approach curve between the output of the model and the target was formed. The test data selected for testing, indices, and outputs are given in Table 2.

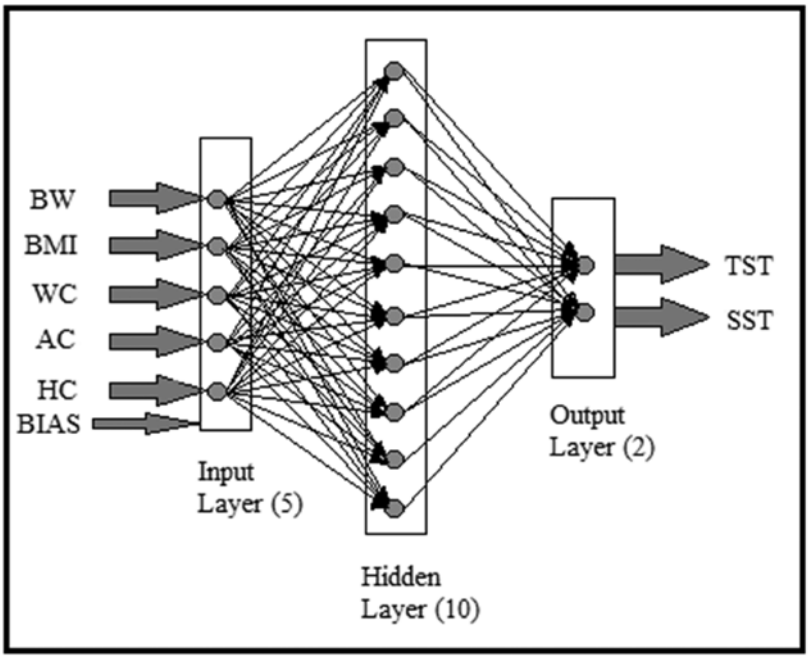

Fig.1. Architecture of ANN model

RESULTS

The results obtained from the ANN model used in the study are given below:

1. The approach coefficients (R) of the ANN model found after the training, test, and validation steps were given in Table 1.

Table 1. ANN results

	Samples	MSE (Mean Squar Error)	R (Regression)
Training	96	1.28522	0.97139
Validation	21	1.53126	0.97681
Testing	21	1.42011	0.97743

2. The performance curve of the ANN model is shown in Figure 2. This curve only includes 11 iterations of the process, and the best performance is understood from the validation curve to be obtained in iteration 5.

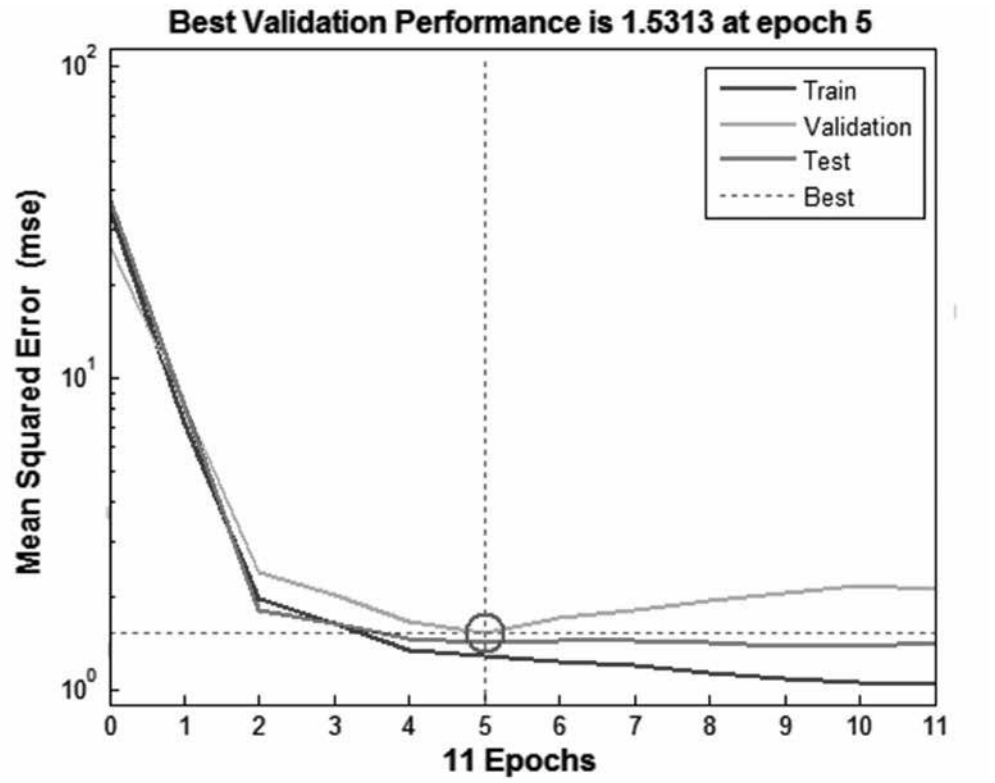

Fig. 2 Performance of the ANN model

3. According to the training, test and validation results of the ANN model, the errors obtained by subtracting targets and outputs are given in Figure 3. According to this error histogram, areas where error is close to zero include almost all of the data

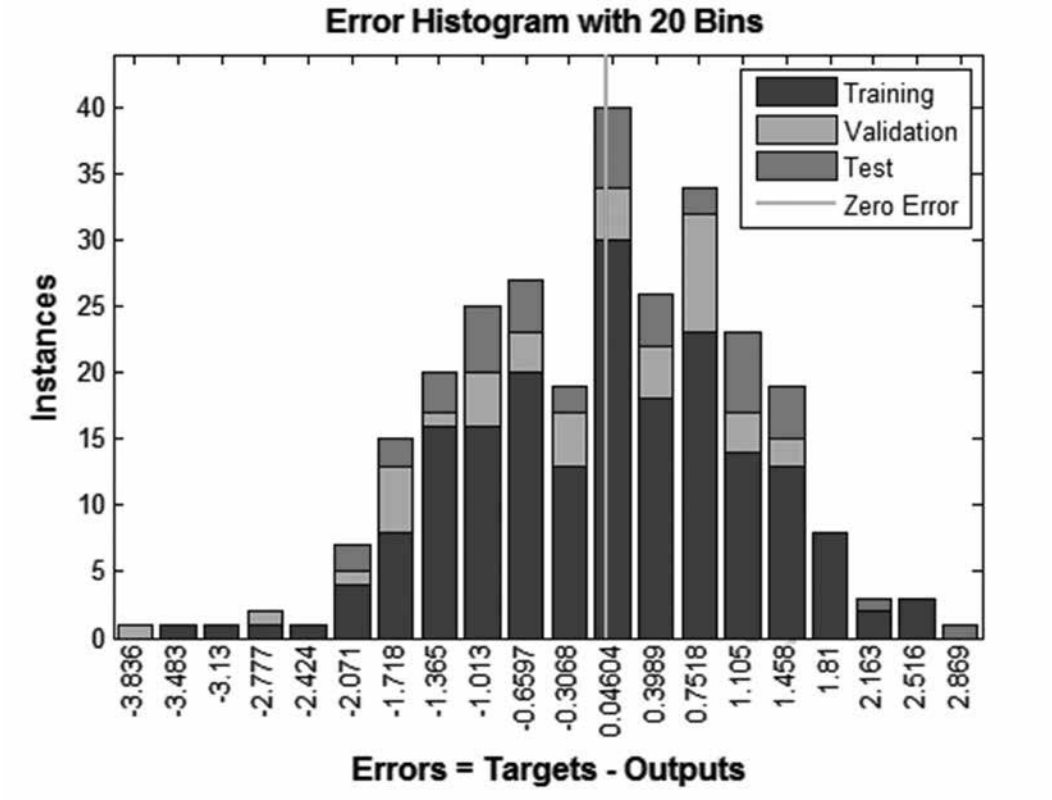

Fig. 3 Error histogram of the ANN model

4. The approach curve between the target and the output obtained after testing the ANN model are shown in Figure 4. The test data used in forming this curve number 21. The obtained approach coefficient is 0.977.

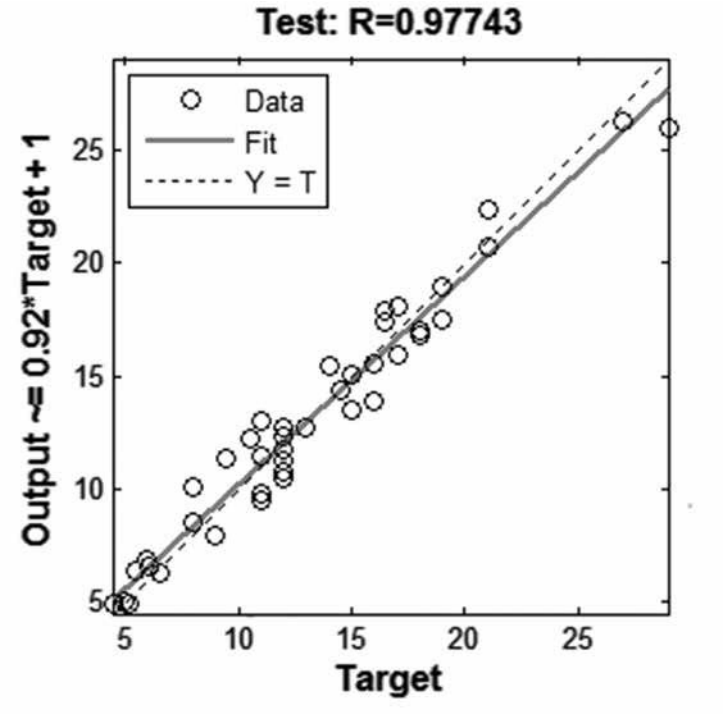

Fig. 4 Regression curve of testing

5. The numeric results of the test and the placement of test data used in the model are given in Table 2.

The graphs obtained from the numeric results of the test are shown in Figure 5 and

Figure 6. The graphical relationship between the first output of the two output model and its first target can be seen in Figure 5. The graphical relationship between the second output of the two output model and its second target can be seen in Figure 6.

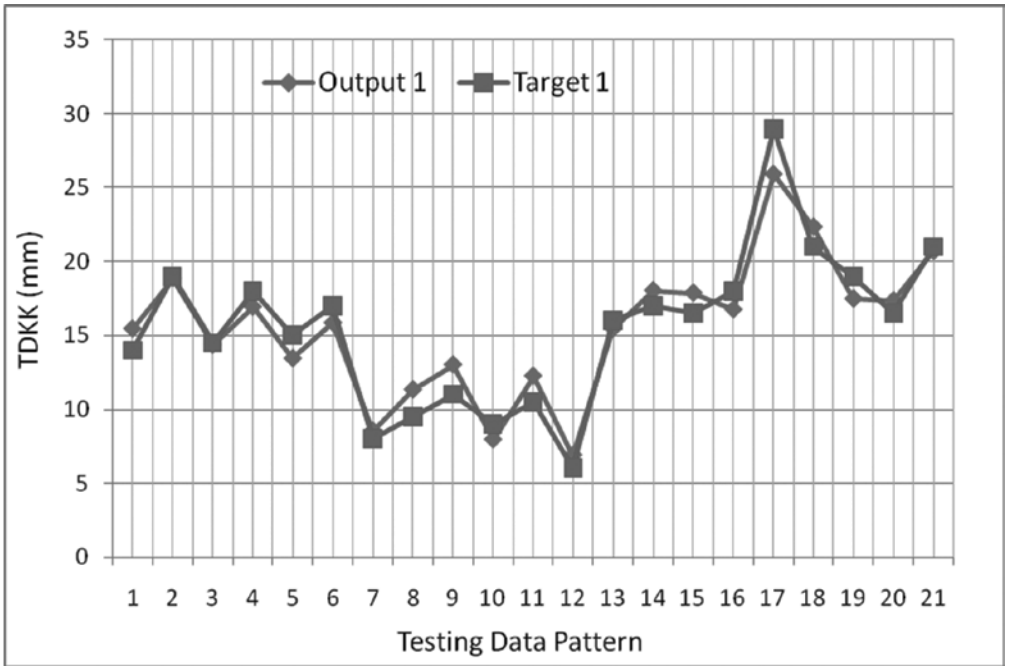

Fig. 5. Comparison of the output1 and target1

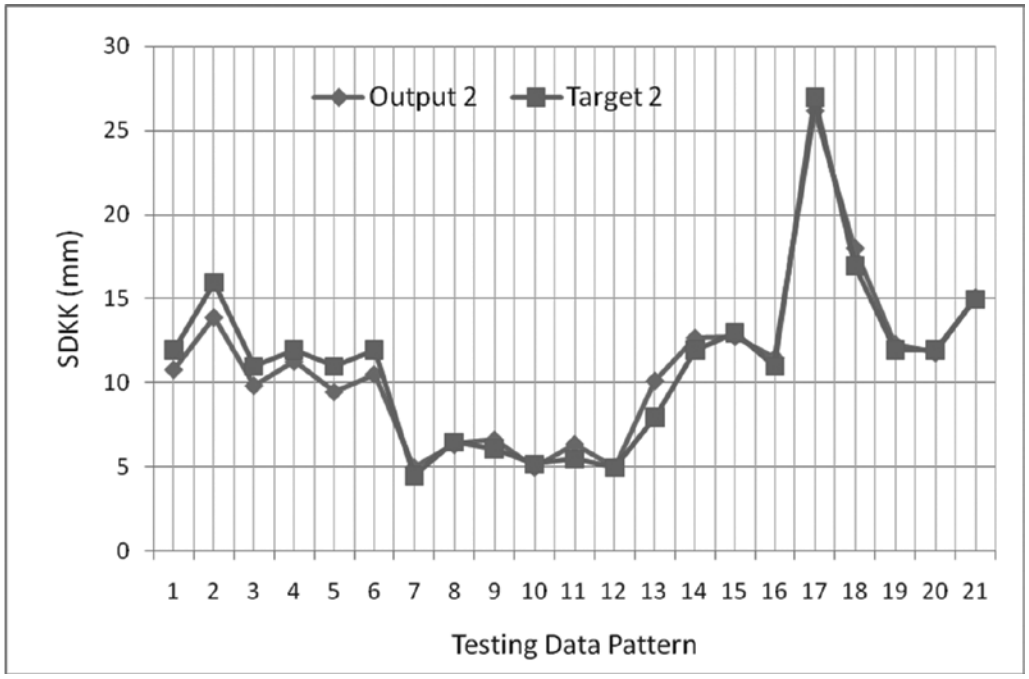

Fig.6. Comparison of the output 2 and target 2

CONCLUSIONS

When the numerical and graphical results obtained from the ANN model used in the study are evaluated, the following statements can be made:

1. The approach coefficient found after testing the ANN model in Table 1 being close to 1 as 0.974 shows that the model produced a very successful prediction. Measuring skinfold thickness in disable individuals can sometimes be hard because of compliance issues. It is understood that skinfold thickness, which is a very valuable measurement in determining nutritional status in disabled individuals and especially autistic children, can be measured with high accuracy using an ANN model.

2. When the performance curve of the ANN model in Figure 2 is examined, the error can be seen to not change and be very low after iteration 11. It is seen from the performance curve that the ANN model was trained with high accuracy and that gene test and validation rates are very close to one. When it is considered that the squared median error from the performance curve is also very low, it can be seen that the ANN model made a very successful prediction.

3. When the error histogram in Figure 3 is examined, it can be seen that for most of the data, error is very close to zero, which is very important regarding the success of the ANN model.

4. When the approach curve in Figure 4 obtained from testing the ANN model is examined, the curve can be seen to be very compliant. This is important with regard to the success of the ANN model

5. When the test data outputs in Table 2 are compared to the targets, they can be seen to be very close. This is important in numerically solidifying the success of the ANN model.

Table 2. Testing data results

Data Number	Indices	Output 1	Target 1	Output 2	Target 2
1	3	15.47	14.00	10.79	12.00
2	10	18.90	19.00	13.90	16.00
3	13	14.37	14.50	9.83	11.00
4	23	16.96	18.00	11.27	12.00
5	42	13.46	15.00	9.47	11.00
6	44	15.88	17.00	10.51	12.00
7	46	8.55	8.00	4.97	4.50
8	50	11.34	9.50	6.32	6.50
9	54	13.04	11.00	6.61	6.10
10	60	7.96	9.00	4.97	5.20
11	65	12.27	10.50	6.35	5.50
12	69	6.90	6.00	4.99	5.00
13	81	15.49	16.00	10.13	8.00
14	82	18.07	17.00	12.68	12.00
15	86	17.91	16.50	12.75	13.00
16	95	16.78	18.00	11.49	11.00
17	96	25.95	29.00	26.20	27.00
18	101	22.38	21.00	18.02	17.00
19	119	17.50	19.00	12.31	12.00
20	134	17.39	16.50	11.78	12.00
21	135	20.73	21.00	15.08	15.00

6. When the comparison graphs in Figure 5 and Figure 6 are examined, the great amount in which those overlap can be seen. The ANN model can thus be understood to have made successful and appropriate predictions according to those graphs.

REFERENCES

Casey A, F, 2013. Measuring body composition in individuals with intellectual disability: a scoping review. J Obes : 1-6.

DeLurgio S, 1998. Forecasting Principles and Applications, New York. Irwing McGraw-Hill.

Duarte O, M, Ruelas Y, F, López-Alcaraz F, del Toro-Equihua M, Sánchez-Ramírez C, 2014. Correlation between percentage of body fat measured by the Slaughter equation and bio impedance analysis technique in Mexican schoolchildren. Nutr Hosp 29: 1: 88-93.

Hagan M, Demuth B, Beale M, 1996. Neural Network Design. PWS Publishing Company, USA, Vol.2- 44.

Hsieh K., Chen Y, Lu H, Lee L, Huang Y, Chen Y, 2013. The novel application of artificial neural network on bioelectrical impedance analysis to assess the body composition in elderly. Nutr J, 12: 21- 28.

Maity A, Gupta K, 2010. Nutritional status of mentally retarded children and correlation between prenatal care and mental retardation. Indian J Maternal Child Health, 12: 4: 1-9.

Sanjay P, Nadgir A, 2013. To Find the Prevalence of Obesity and Overweight among Children Having Mental Retardation in Age Group 5 To 15 Years in Dharwad Urban. International Journal of Health Sciences and Research 3:1: 7-13.

Seth A, 2013. Relevance of Measuring Body Fat in Children. Indian Pediatr 50: 832-833.

Shabayek M, M, 2004. Assessment of the nutritional status of children with special needs in Alexandria. Part II: Anthropometric measures. J Egypt Public Health Assoc, 79:5: 363-382.

Dizinler

Her veri tabanından dergilerin dizin güncelliği kontrol edilmelidir. DergiPark sorumluluk almamaktadır.

Atıf Dizinleri

TR Dizin
https://app.trdizin.gov.tr/dergi/T0RZek13PT0/igdir-universitesi-fen-bilimleri-enstitusu-dergisi

Dergi Anasayfası
Hakkında
Amaç ve Kapsam
Makale Gönder
Dergi Kurulları
Yazım Kuralları
Etik İlkeler ve Yayın Politikası
Ücret Politikası
Dizinler
Arşiv
İletişim

Açık Erişim Politikası
Gizlilik Beyanı
Yayın Ücreti
Anahtar Kelimeler
ETİK SORUMLULUKLAR VE GÖREVLER
YAYIN İLKELERİ VE MAKALE DEĞERLENDİRME SÜREÇLERİ
07 April 2020 EASE Statement on Quality Standards
FBED Yayın İlkeleri