Uluslararası Akademik Birikim Dergisi
Yıl: 2024, Cilt: 7, Sayı 3 ss. 355-372

Examining the Relationship Between Individual Innovativeness and Digital Citizenship*

Fatma ÜSTÜN

ftmaustun06@gmail.com
https://orcid.org/0009-0006-9742-6367

Melih ENGİN
Doç.Dr., Bursa Uludağ Üniversitesi
melihengin@uludag.edu.tr
https://orcid.org/0000-0002-4953-6119

Makale Başvuru Tarihi : 12.03.2024
Makale Kabul Tarihi : 05.05.2024
Makale Yayın Tarihi : 31.05.2024
Makale Türü : Araştırma Makalesi
DOİ: 10.5281/zenodo.11401841

Anahtar Kelimeler:

Bireysel Yenilikçilik,

Dijital Vatandaşlık,

Yenilikçilik.

Özet

Bu araştırmanın amacı katılımcıların bireysel yenilikçilik durumları ile dijital vatandaşlık becerileri arasındaki ilişkiyi ortaya koymaktır. Araştırma kapsamında literatür taraması yapılmış, bireysel yenilikçilik ölçeği ve dijital vatandaşlık ölçeği çevrimiçi formlara aktarılmıştır. Araştırma evreni dijital ayak izine sahip olan vatandaşlardır ve kolayda örnekleme yöntemi ile araştırmaya katılmayı kabul eden 343 gönüllüden çevrimiçi form uygulaması ile veriler toplanmıştır. SPSS 28 ve AMOS 28 programları ile frekans tabloları, gruplar arasında bireysel yenilikçilik düzeyleri arasında farklılıkları araştırmak için t-testi ve anova, ölçek bazında normal dağılım analizleri ve doğrulayıcı faktör analizleri yapılmıştır. Bireysel yenilikçilik ölçeğinin dijital vatandaşlığın alt boyutları üzerine etkilerinin olup olmadığına yönelik hipotezlerin test edildiği araştırma modeli oluşturulmuş ve yol analizi ile bu hipotezler test edilmiştir. Araştırma sonucunda katılımcıların yaş değişkenlerinin bireysel yenilikçilik düzeyini etkilediği tespit edilmiştir. Bireysel yenilikçilik düzeyi ile dijital vatandaşlık alt boyutları arasındaki ilişkiler ortaya çıkarılmıştır. Araştırma bireylerin yenilikçilik düzeylerinin dijital vatandaşlık becerilerini nasıl etkilediğini ortaya koyması açısından literatüre katkı sağlayacaktır.

Bireysel Yenilikçilik ile Dijital Vatandaşlık Arasındaki İlişkinin İncelenmesi

Abstract

Keywords:

Individual Innovativeness,

Digital Citizenship,

Innovativeness

The aim of this research is to reveal the relationship between the participants' individual innovativeness and digital citizenship skills. Within the scope of the research, a literature review was conducted, and the individual innovativeness scale and digital citizenship scale were transferred to online forms. The research population is citizens with digital footprints, and data was collected using an online form from 343 volunteers who agreed to participate in the research using a convenience sampling method. Frequency tables, t-test and anova to investigate differences in individual innovativeness levels between groups, scale-based normal distribution analyzes and confirmatory factor analyzes were made with SPSS 28 and AMOS 28 programs. A research model was created to test hypotheses about whether the individual innovativeness scale has effects on the sub-dimensions of digital citizenship, and these hypotheses were tested with path analysis. As a result of the research, it was determined that the age variables of the participants affected the individual innovativeness level. The relationships between individual innovativeness level and digital citizenship sub-dimensions were revealed. The research will contribute to the literature by revealing how individuals' innovativeness levels affect their digital citizenship skills.

*Bu çalışma birinci yazarın ikinci yazar danışmanlığında hazırladığı ve yayınlanan yüksek lisans tez çalışmasından üretilmiştir.

1. INTRODUCTION

Today, technological developments have accelerated the digitalization process of societies and transformed the way individuals interact and access information in digital environments. This transformation has created a necessity for individuals to utilize their individual innovativeness and digital citizenship skills. Yet, the characteristics and dynamics of the connection between individual innovativeness and digital citizenship remain inadequately comprehended. This research seeks to explore the correlation between individual innovativeness and digital citizenship.

Maslow, who categorizes people's needs hierarchically, mentions that personality development occurs with the desire to achieve personal goals. To achieve this, people turn to creativity, freedom, and the search for meaning. When self-actualization is the goal, the individual is fully happy and satisfied. Individual innovativeness is the individual research and development of a new idea or approach to solve a problem by using creativity (Hirschman, 1980). Many researchers have conducted studies on individual innovativeness.

Amabile (2018) has mentioned the importance of individual innovativeness by addressing issues such as individual differences, motivation, organizational impact, teamwork, and leadership within the framework of creativity and innovativeness. He emphasized that individual innovativeness has great importance in many areas such as creativity, problem-solving, generating ideas, creating new products and services, and increasing productivity in processes. Amabile (2018) mentioned that individual factors such as personal characteristics, problem-solving abilities, abilities, and motivation are effective in individual innovativeness. He stressed the significance of factors like organizational culture, management style, and working environment in influencing the innovativeness process alongside individual factors.

Simonton (1999) defines individual innovativeness as the emergence of a new, useful, or valuable product, service, or idea through the influence of personal factors such as creativity, passion, and effort. Individual innovativeness can be realized through a combination of personal characteristics, motivation, and effort, as well as creativity, knowledge, and the ability to develop ideas. Individual innovativeness requires not only the emergence of new ideas but also the use of strategies and skills required for the successful implementation and diffusion of these ideas.

Individual innovativeness is also used to refer to innovativeness that consumers create on their own to meet their own needs. Such innovativeness are customized products and services that replace or add to the standard products and services traditionally produced by firms. The researcher states that individual innovativeness help consumers to better meet their needs, often at low cost and with high levels of user satisfaction (Von Hippel, 2006).

Rogers (2010) defines individual innovativeness as personal development and change through the adoption, use, or adaptation of new ideas. Individual innovativeness is the process by which individuals influence their own lives through learning, exploring, and experiencing. In this process, individuals produce unique solutions and develop themselves further. According to Rogers (2010), innovativeness go through a five-stage diffusion process. These stages are handled in five categories from the first adopters of the innovativeness to the later adopters. The first of these are innovators who are the first to discover and adopt innovativeness . People in this category are generally open to innovativeness , enjoy taking risks, and are willing to experiment even in the early stages of innovativeness . The second is pioneers (Early Adopters). People in this category are those who are a little more cautious about adopting innovativeness . People in this category start experimenting with innovativeness a little later than early adopters and are a little more critical of innovativeness . However, they still tend to adopt innovativeness . Another category is questioners (Early Majority). Individuals in this category are the ones who spend the most time adopting innovativeness and constitute the majority. These people start to adopt innovativeness when they see that they are already accepted and used. The fourth category is the skeptics (Late Majority). People in this category are those who are too late to adopt innovativeness . They are very skeptical and critical of innovativeness , but they are forced to accept innovativeness when they see that people around them are now adopting them. People in the fifth category are traditionalists (Laggards). People in this category are the last to adopt innovativeness . These people are highly resistant to innovativeness and stick to traditional ways of doing things. These groups explain how innovativeness spread and which types of people adopt innovativeness at which stage.

Individual innovativeness is a very important topic in Turkish literature. Many Turkish researchers have also conducted studies on individual innovativeness. In a study led by Kılıçer and Odabaşı (2010), the individual innovativeness scale was tailored to fit the Turkish cultural context, and evaluations of its validity and reliability were conducted. The primary aim of the study is to determine the prevalence and measurability of individual innovativeness within the Turkish cultural context (Kılıçer & Odabaşı, 2010). The findings of the research indicate that individual creativity holds significance within Turkish culture and is quantifiable.

A research undertaken by Çuhadar et al. (2013) delved into the correlation between the individual innovative characteristics of pre-service educators and their competencies in technological pedagogical training. Various metrics were employed in the research to explore the connection between the individual innovative characteristics of the participants and their competencies in technological pedagogical education. Individual innovativeness traits and technopedagogical education competencies of the participants were measured through the scales. The study findings indicated that the participants, on the whole, demonstrated a high level of competencies in technological pedagogy. However, it was revealed that the participants tended to test an innovativeness on the individual or society before accepting it and to develop a certain perception of benefit based on observable results (Çuhadar et al., 2013).

In a study conducted by Demirel and Seçkin (2008), the effect of knowledge and knowledge sharing on innovativeness was examined. Demirel and Seçkin(2008) research emphasizes the significance of sharing the knowledge that organizations and individuals have and using this knowledge in the innovativeness process in the processes of innovativeness, competitive success, and creating an innovative culture (Demirel & Seçkin, 2008). In the research, it is stated that knowledge is based on innovativeness, and innovativeness is based on knowledge. In order for innovative ideas to emerge, existing knowledge and experience must first be brought together. Likewise, the process of knowledge generation is shaped by innovative approaches. Therefore, it is concluded that the innovative actions of an organization should include the use and flow of knowledge in the innovativeness process. In light of the study results, the development of innovative thinking depends on the degree of learning and knowledge sharing of the social culture (Demirel & Seçkin, 2008).

These studies have investigated the concept of individual innovativeness in different sectors and different regions in Turkey and have been conducted to determine the factors affecting individual innovativeness behavior. All of these studies discuss the importance and impact of individual innovativeness and provide guidance for a better understanding of the subject.

On the other hand, the digital world is becoming an indispensable component of our daily existence. The Internet, social networking platforms and mobile technologies have become essential components of our daily routines. With the adoption of disruptive technologies in many areas, the concept of digital transformation has begun to be discussed. Many country governments are developing strategic policies for digital transformation to increase social welfare by increasing productivity and innovation (Ebert & Duarte, 2018). Because digital transformation is one of the most significant business changes to prompt societal changes, thus altering old patterns of human activity, behavior, communication, and everyday routines. According to the results of previous studies, digital citizenship has become an important element for successful digital transformation (Slavkovi et al., 2023). Digital citizenship, defined as interacting with institutions or other citizens using digital Technologies (Simsek & Simsek,2013), is the most important element in the success of digital transformation (Jæger, 2021; Lewis, 2018). In such a situation, the questions of what digital citizenship is and how to gain digital citizenship rights come to mind.

According to Ribble (2011), digital citizenship encompasses a range of competencies, mindsets, and actions that enable individuals to act safely, responsibly, and ethically in the digital world. This concept has emerged with the proliferation of the Internet and other digital technologies. Digital citizenship is not only limited to acting responsibly in the digital world individually. It is also about the social interaction and participation of individuals in the digital environment. Digital citizens are engaged in social, cultural, and economic interactions within the virtual realm and actively contribute to its advancement. Digital citizenship has therefore become a fundamental component of modern society.

Individuals recognized as digital citizens possess the capability to engage in critical thinking while utilizing information and communication tools, grasp the ethical implications of their online conduct, employ technology responsibly to prevent harm, understand their rights to online communication, and demonstrate proficiency in sharing and collaborative practices. Digital citizenship includes rules of behavior in all rights and responsibilities related to the use of technology on a large scale. In today's world, the understanding of being a

good citizen is rapidly transforming into the necessity of being a good digital citizen (Çubukçu & Bayzan, 2013).

In addition, the use of online environments has affected the concept of citizenship in society and human beings and moved it to the digital environment. As per Aydın (2015), digital citizenship is characterized by adhering to ethical and universal principles within the online sphere, while also maintaining awareness of potential risks.

Digital citizenship means having knowledge and skills about how a person should behave in the digital world. This concept includes knowledge about internet use, information technologies, social media use, data security, and online interactions. Digital citizenship also includes the skills needed to use the internet safely and responsibly. Internet users should have digital citizenship skills to safely navigate the digital world, protect their personal information, and interact with others. Digital citizenship covers issues such as access to accurate information in the digital world, information sharing, internet safety, cyberbullying, and digital ethics. The notion of digital citizenship further empowers individuals and society to comprehend their entitlements and obligations within the digital realm.

Ribble (2015) introduced a framework delineating the notion of digital citizenship and emphasizing education in this domain. According to this model, it is a set of skills, attitudes, and behaviors that enable citizens to behave safely, responsibly, and ethically in the digital world. Accordingly, Ribble (2011) mentioned nine skills in digital citizenship.

Nine core digital citizenship skills are digital literacy, digital law, digital communication, digital access, digital commerce, digital ethics, digital rights and responsibilities, digital health, and digital security. Digital literacy is defined as the ability to access the desired information in the right ways and to utilize technology while obtaining and transferring information. Digital law denotes the capacity to recognize and abide by the regulations and statutes prevalent in digital settings. Digital communication is defined as the ability to use digital communication tools for their intended purpose and to communicate with people online within ethical rules. Digital access refers to providing access to technology to benefit from digital technologies. This access is the uninterrupted and fast access to technology from anywhere and at any age. Digital commerce refers to the state of being able to act consciously and safely while shopping online, using digital banking applications, etc. Digital ethics is expressed as the ability to be aware that ethical rules should be applied in online environments and to act accordingly. In short, it is the reflection of moral rules in the online environment. Digital rights and responsibilities are expressed as the ability to use online environments freely, to express opinions in these environments, but to do so responsibly and without harming others. Digital health refers to the state of being physically and mentally healthy in online environments. It is important for individuals not to use digital environments and the internet when necessary for their own health. Digital security refers to the ability to be aware of the threats and dangers in the digital environment, to act consciously when faced with such a situation, and to take precautions against these dangers.

The common point of all these studies in the literature is that they emphasize the importance of the concept of digital citizenship. The focus has been on digital citizenship education to help individuals acquire the skills necessary to act ethically, responsibly, and safely in the digital world.

The concepts of individual innovativeness and digital citizenship require individuals to keep themselves technologically up-to-date, think innovatively, and behave ethically, responsibly, and safely in the digital environment. Individual innovativeness is strongly interconnected with digital citizenship. Individual innovativeness refers to individuals being creative in developing new ideas, creating new products or services, and developing businesses. Digital citizenship entails comprehending digital technologies and employing them securely. The correlation between individual innovativeness and digital citizenship resides in the utilization of digital tools and their potential to foster innovative thinking and problem-solving. Individual innovativeness is believed to have a significant impact on the cultivation of digital citizenship abilities. When developing new ideas, individuals research, analyze data, and communicate using digital tools and resources. In this process, it is necessary to act in accordance with digital citizenship skills and to be especially careful about digital security and privacy issues. On the other hand, digital citizenship is thought to be a ground for individual innovativeness. Individuals can develop innovative ideas by utilizing the resources available on the internet. At the same time, digital citizenship skills enable individuals to implement these ideas in an ethical, responsible, and safe manner. Individuals with digital citizenship skills can use digital technologies more efficiently and realize innovative ideas more quickly. Likewise, individuals with individual innovativeness skills can better understand digital

technologies and develop more innovative solutions using these technologies. Therefore, the relationship between individual innovativeness and digital citizenship is important for the realization of innovative ideas using digital technologies. Developing both individual innovativeness and digital citizenship skills of individuals will be beneficial for themselves and society. Hence, exploring this area through research will enhance understanding of the significance of skills related to digital citizenship and individual innovativeness, yielding advantageous outcomes for both individuals and communities.

Modern states want the individuals they raise to be individuals who think independently, produce, offer creative ideas, are open to innovation and change, are at peace with technology, and criticize and question (Aydemir & Adamaz, 2017). Individuals should act in line with their digital citizenship skills while developing their innovative ideas using digital tools and resources. Digital citizenship skills help individuals implement their innovative ideas ethically, responsibly and safely. Nine subcategories are examined under the umbrella of digital citizenship: digital literacy, digital law, digital communication, digital access, digital commerce, digital ethics, digital rights and responsibilities, digital health and digital security. In order for individuals to be successful in the technological world, it is extremely important to reveal the relationship between individual innovativeness and digital citizenship. Analyzing these sub-issues will provide insights into the intricate dynamics and correlations between individual innovativeness and digital citizenship, thus addressing the core inquiry of the study. This study will provide a better understanding of the interaction between these two concepts and bring a new perspective to the literature. The research results can be used to improve the theoretical frameworks in related fields, to provide a basis for future research, and to encourage new studies in this field.

The main purpose of this research is to investigate the relationship between individual innovativeness and digital citizenship. The research will reveal how the individual innovativeness of the participants affects digital citizenship and its sub-dimensions. In this context, the research questions are listed below.

1. What is the level of individual innovativeness of the participants?

2. Is there a significant difference in individual innovativeness levels according to gender?

3. Is there a significant difference in individual innovativeness levels according to age groups?

4. Is there a significant relationship between the level of participants' individual innovativeness and sub-dimensions of digital citizenship?

Based on the research question "Does individual innovativeness affect digital citizenship and its sub-dimensions?", the research model and related hypotheses were created. The related hypotheses are given below.

H1: There is a significant difference in individual innovativeness according to gender.

H2: There is significant difference in individual innovativeness according to age groups.

H3: There is a positive and significant relationship between individual innovativeness(II) and digital literacy, which is a sub-dimension of digital citizenship.

H4: There is a positive and significant relationship between individual innovativeness(II) and digital law, which is a sub-dimension of digital citizenship.

H5: There is a positive and significant relationship between individual innovativeness(II) and digital rights and responsibilities, which is a sub-dimension of digital citizenship.

H6: There is a positive and significant relationship between individual innovativeness(II) and digital communication, which is a sub-dimension of digital citizenship.

H7: There is a positive and significant relationship between individual innovativeness(II) and digital security, which is a sub-dimension of digital citizenship.

H8: There is a positive and significant relationship between individual innovativeness(II) and digital commerce, which is a sub-dimension of digital citizenship.

H9: There is a positive and significant relationship between individual innovativeness(II) and digital access as a sub-dimension of digital citizenship.

H10: There is a positive and significant relationship between individual innovativeness(II) and digital ethics, which is a sub-dimension of digital citizenship.

H11: There is a positive and significant relationship between individual innovativeness(II) and digital health, a sub-dimension of digital citizenship.

2. METHOD

Relational screening model was used in the research. This model is used to determine the relationship between two or more variables and to obtain clues about cause and effect (Karasar, 2017). As a result of the literature review, the research model was established based on the existing variables. The theoretical model was tested using structural equation modeling. Structural equation is a combination of regression and factor analysis and is a theoretical structure represented by latent and observed variables (Byrne, 2010). The hypotheses of the model created as a result of the literature review are given below in Figure 1.

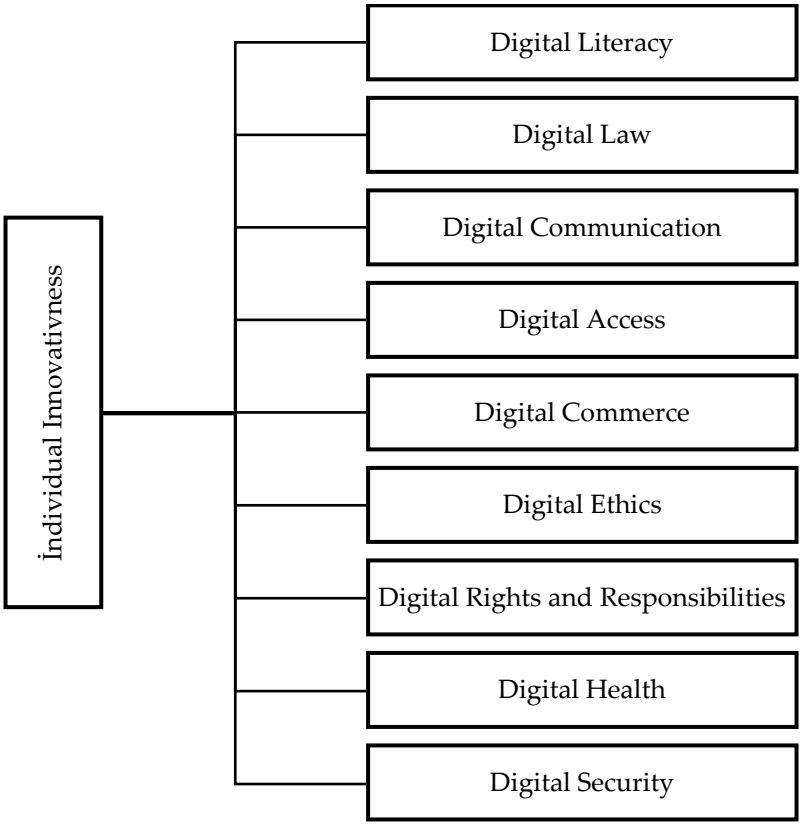

Figure 1. Research Model

2.1. Sample

The research population comprises individuals with a digital presence in online environments. Participants for the sample were recruited based on their willingness to complete the scales used as data collection instruments for the study. Convenience sampling was employed for sample selection, resulting in 343 participants completing the study.

The research population comprises individuals active in digital environments. Participants for the sample volunteered to complete the scales used as data collection tools. The convenience sampling method was utilized for sample selection, resulting in 343 participants. Data were gathered via digital platforms (Twitter, Instagram, Whatsapp, LinkedIn) between January and February 2023.

The analysis revealed a nearly equal participation of women (49.9%) and men (50.1%). Among the participants, 209 (60.9%) were single, while 134 (39.1%) were married. A significant proportion of participants held bachelor's degrees (63%). Notably, the majority of participants reported incomes above the minimum wage threshold (53.9%). In terms of employment status, 44.6% were employed, 35.3% were students, 9.3% were unemployed, and 7.9% were retired. Additionally, 2.9% indicated other employment statuses. Participant ages

were distributed as follows: 38.8% were aged 18-24, 27.7% were aged 25-34, 15.7% were aged 35-44, and 17.2% were aged 45 and above.

Table 1: Description of the Sample

		f	%
Gender	Female	171	49,9
	Male	172	50,1
Marital Status	Married	134	39,1
	Single	209	60,9
Education Status	Middle School	3	0,9
	High School	36	10,5
	Associate's Degree	23	6,7
	Bachelor's Degree	216	63
	Master's Degree	47	13,7
	Doctorate's Degree	18	5,2
Monthly Income	Below minimum wage	33	9,6
	Minimum wage	185	53,9
	Above minimum wage	125	36,4
Employment Status	Student	121	35,3
	Working	153	44,6
	Not working	32	9,3
	Retired	27	7,9
	Other	10	2,9
Age	Under 18 years old	2	0,6
	18 – 24	133	38,8
	25 – 34	95	27,7
	35 – 44	54	15,7
	45 and above	59	17,2

According to the findings obtained for the question "What are the individual innovativeness levels of the participants?", which is among the sub-problems of the study, it was determined that the majority of the participants were in the "questioning" category among the individual innovativeness categories. The lowest individual innovativeness score among the participants was 31 and the highest individual innovativeness score was 94. The lowest score that can be obtained from the individual innovativeness scale is 14 and the highest score is 94. The findings show that there are participants who have the highest score that can be obtained from the scale among the participants.

2.2. Data Collection Tools

The individual innovativeness scale, originally developed in another language, was translated into Turkish by Kılıçer and Odabaşı (2010). During this translation process, the scale was found to consist of four factors instead of the original five. These factors, namely "Resistance to change," "Idea leadership," "Openness to experience," and "Risk-taking," were determined based on relevant literature and item characteristics. The scale comprises a total of 20 statements, each assessed on a 5-point Likert scale ranging from "Strongly Disagree" to "Strongly Agree." In the development phase, twelve statements were framed positively (statements 1, 2, 3, 5, 8, 9, 11, 12, 14, 16, 18, and 19) while eight were framed negatively (statements 4, 6, 7, 10, 13, 15, 17, and 20).

The innovativeness score is derived by subtracting the total score of positive statements from the total score of negative statements on the scale, and then adding 42 points to the result. Scores on the scale can vary from 14 to 94, allowing for the classification of individuals based on their innovativeness level. For instance, a score exceeding 80 indicates an 'Innovator', while scores ranging from 69 to 80 represent a 'Pioneer'. Scores falling

between 57 and 68 are labeled as 'Questioner', those between 46 and 56 as 'Skeptic', and scores below 46 as 'Traditionalist'.

Furthermore, the scale scores offer an assessment of individuals' overall innovativeness levels. For instance, those scoring above 68 are categorized as highly innovative, whereas those scoring below 64 are deemed to exhibit a lower level of innovativeness (Kılıçer & Odabaşı, 2010).

The digital citizenship scale used in the study was prepared by Isman and Canan Güngoren (2014). In the process of developing the scale, the relevant literature was initially reviewed and an item pool was created based on the nine dimensions of digital citizenship. The scale consists of 33 items in total. A 5-point Likert scale ranging from "Strongly Disagree" to "Strongly Agree" was used. The scale items were reduced into sub-dimensions with nine sub-dimensions of digital citizenship.

To evaluate significant differences between groups concerning gender, the independent sample t-test was utilized owing to both the normal distribution of data and the discernible distinction between the two groups. Similarly, for assessing significant differences among groups concerning age, the one-way analysis of variance was employed, given the analysis encompassed more than two groups. The scales used in the study were subjected to factor analysis during the development and adaptation process; however, confirmatory factor analysis was applied separately for both scales in our data set. Confirmatory factor analysis (CFA), which is generally used in scale development and validity analysis, is also used to confirm a predetermined structure (Yaşlıoğlu, 2017). When conducting CFA, goodness of fit values should be examined first. Goodness of fit values are used to determine whether the data set obtained as a result of confirmatory factor analysis confirms the construct to be tested (Bentler & Yuan, 1999). During Confirmatory Factor Analysis (CFA), CMIN/DF (Chi-Square/Degrees of Freedom), GFI (Goodness of Fit Index), AGFI (Adjusted Goodness of Fit Index), NFI (Normed Fit Index), IFI (Incremental Fit Index), NNFI/TLI (Non-Normed Fit Index or Tucker-Lewis Index), CFI (Comparative Fit Index), Various goodness-of-fit measures such as RMSEA (Root Mean Square Error of Approximation), and SRMR (Root Mean Square Root of Standard Error Squares) should be taken into account. Although there are different opinions on the threshold values required for model goodness-of-fit values, these values are generally accepted within a certain range.

In addition to the goodness of fit values, the factor loadings of the items should also be examined. Factor loadings must be at certain values to be accepted. "Increasing the sample size decreases the loadings that can be accepted as significant. In a sample of 350 people, loadings above 0.3 can be considered significant, while this value increases to 0.4 when the sample size drops to 200, to 0.5 around 120 and to 0.6 when the sample size drops to 85. For a sample of 50, the acceptable value is 0.75. Factor analysis is not recommended for samples below 50" (Hair, 2009).

Confirmatory factor analysis was performed in AMOS 28 for the construct validity of the individual innovativeness scale. With the analysis, the goodness of fit values of the scale and the standardized regression load values of each item measuring the factors were examined. The table below shows the goodness of fit values accepted in the literature and the goodness of fit values observed in the individual innovativeness scale.

Table 1: Individual Innovativeness Scale Goodness of Fit Values

	CMIN/DF	CFI	TLI	IFI	SRMR	RMSEA
Goodness of Fit Acceptance Values	≤ 3	≥ 0,90	≥ 0,90	≥ 0,90	≤ 0,10	≤ 0,08
Goodness of Fit Observed Values	2,084	,919	,907	,920	,0563	,056

Another factor that should be considered when conducting confirmatory factor analysis is the standardized factor loadings. The table below shows the regression coefficients of the individual innovativeness scale.

Table 2: Standardized Regression Coefficients for Individual Innovativeness

Scale Item	Factor	Coefficient	Scale Item	Factor	Coefficient

BYM20	Res. to change	,641	BYM2	Open. to Ex.	,755
BYM17	Res. to change	,636	BYM3	Open. to Ex.	,745
BYM15	Res. to change	,475	BYM5	Open. to Ex.	,564
BYM13	Res. to change	,739	BYM14	Open. to Ex.	,615
BYM10	Res. to change	,634	BYM18	Open. to Ex.	,708
BYM7	Res. to change	,655	BYM12	Thought L.	,588
BYM6	Res. to change	,672	BYM11	Thought L.	,748
BYM4	Res. to change	,432	BYM9	Thought L.	,789
BYM16	Risk Taking	,607	BYM8	Thought L.	,658
BYM19	Risk Taking	,746	BYM1	Thought L.	,545

For the construct validity of the digital citizenship scale, confirmatory factor analysis was conducted in AMOS 28. With the analysis, the goodness of fit values of the scale and the standardized regression load values of each item measuring the factors were examined.

Table 3: Digital Citizenship Scale Goodness of Fit Values

	CMIN/DF	CFI	TLI	IFI	SRMR	RMSEA
Goodness of Fit Acceptance Values	≤ 3	≥ 0,90	≥ 0,90	≥ 0,90	≤ 0,10	≤ 0,08
Goodness of Fit Observed Values	2,749	,839	,815	,842	,0824	,072
Goodness of Fit Improved Values	2,221	,902	,883	903	,0683	,060

Based on the data in the table, only CMIN/DF, SRMR and RMSEA values were found to be within the range of acceptable values, while the other values were close to the expected value but still below the expected value. Modification indices were reviewed in order to increase the goodness of fit values to acceptable levels based on the available data. As a result of the examination of the modification indices, the items with the highest modification indices were identified and covariance was defined between them. When the standardized regression coefficients were examined, item 14 and item 19 were removed from the model. The goodness of fit values obtained from the improved model as a result of these procedures are shown in the table above as "improved goodness of fit values".

Another factor to be considered when conducting confirmatory factor analysis is the standardized factor loadings. The table below shows the regression coefficients of the digital citizenship scale.

Table 4: Digital Citizenship Standardized Regression Coefficients

Scale Item	Factor	Coefficient	Scale Item	Factor	Coefficient
DVM20	Digital Rights	,626	DVM31	Digital Commerce	,714
DVM21	Digital Rights	,689	DVM32	Digital Commerce	,707
DVM22	Digital Rights	,732	DVM33	Digital Commerce	,709
DVM23	Digital Rights	,731	DVM24	Digital Law	,754
DVM16	Digital Security	1,710	DVM25	Digital Law	,557

DVM15	Digital Security	,219	DVM26	Digital Law	,589
DVM8	Digital Literacy	,696	DVM27	Digital Law	,648
DVM9	Digital Literacy	,837	DVM4	Digital Com.	,698
DVM10	Digital Literacy	,629	DVM3	Digital Com.	,614
DVM11	Digital Literacy	,836	DVM2	Digital Com.	,495
DVM12	Digital Literacy	,731	DVM1	Digital Com.	,575
DVM13	Digital Literacy	,791	DVM28	Digital Health	,542
DVM7	Digital Access	,879	DVM29	Digital Health	,751
DVM6	Digital Access	,800	DVM30	Digital Health	,770
DVM5	Digital Access	,757			
DVM18	Digital Ethics	,732			
DVM17	Digital Ethics	,743			

Reliability analysis was performed on the scales utilized within this study. The reliability of the research is gauged through Cronbach's alpha coefficient, a measure employed to assess the internal consistency of scale items. Cronbach's alpha coefficient serves to affirm that the items within the scale exhibit coherence and effectively measure the same construct. The reliability level is interpreted based on the value of Cronbach's alpha coefficient, wherein a coefficient falling within the range of 0 to 0.40 denotes unreliability, 0.40 to 0.60 suggests low reliability, 0.60 to 0.80 indicates moderate reliability, and 0.80 to 1.00 signifies high reliability (Uzunsakal & Yıldız, 2018). The outcomes of the reliability analysis for both the individual innovativeness scale and the digital citizenship scale are delineated below.

Table 5: Individual Innovation Scale Reliability Analysis

Reliability Values		
Factor	Number of Items	Cronbach's Alpha
Resistance to change	8	,826
Thought Leadership	5	,798
Openness to Experience	5	,805
Risk Taking	2	,622
Total	20	,729

As a result of the reliability analysis applied to the individual innovativeness scale, a value of 0.729 was obtained. The obtained data shows that the scale is quite reliable. The table also includes factor-based alpha values. Cronbach's alpha test was applied to a total of four factors in the scale one by one and the alpha values of all of them were listed. The alpha value of all factors in the list is above 0.6. The highest reliability value among the factors belongs to the "Resistance to Change" factor with a value of 0.826.

Table 6: Digital Citizenship Scale Reliability Analysis

Reliability Values		
Factor	Number of Items	Cronbach's Alpha
Digital Communication	4	,739
Digital Access	3	,833
Digital Literacy	6	,881
Digital Security	2	,525
Digital Ethics	2	,703
Digital Rights and Responsibilities	4	,807
Digital Law	4	,791
Digital Health	3	,722
Digital Commerce	3	,752
Total	31	,889

As a result of the reliability analysis applied to the digital citizenship scale, a value of 0.889 was obtained. The obtained data shows that the scale is highly reliable. The table also includes factor-based alpha values. Cronbach's alpha test was applied to the nine factors in the scale one by one and the alpha values of all of them were listed. The alpha values of the factors in the list are above 0.7. Only the digital security factor has a value of 0.525 and has low reliability.

2.3. Data Analysis

The analyses of the present study aiming to determine the effects of individual innovativeness on digital citizenship were carried out using the IBM SPSS Statistics 28 program. Demographic characteristics(gender and age) were analyzed using frequency analysis. Kolmogorov-Smirnov test, One-Way ANOVA and t-test were used in analyzing the differences by demographic variables. The reliability values of scales were determined by calculating Cronbach's Alpha coefficients. Confirmatory factor analysis was conducted in order to determine the factor structures separately for individual inovativeness scale and digital citizenship scale by using Amos 28 program and path analysis was conducted to test the hypotheses.

3. FINDINGS

When the individual innovativeness levels of the participants are analyzed according to the sub-dimensions of individual innovativeness, the group with the highest number of participants consists of questioners, while the group with the lowest number of participants consists of traditionalists. 14.6% of the participants are in the innovative category. It was determined that 35% of the remaining participants were pioneers, 41.1% were questioners, 7% were skeptics and 2.3% were traditionalists.

Table 7: Distribution of Individual Innovativeness Categories

	f	%
Innovative	50	14,6
Pioneer	120	35,0
Questioner	141	41,1
Skeptic	24	7,0
Traditionalist	8	2,3

The predominance of participants in the respondent category suggests a cautious stance toward innovativeness. Questioners are people who evaluate the benefits and disadvantages of innovativeness before adopting them. In order to adopt innovativeness, people in this group observe other people's experiences and form an opinion about whether innovativeness really work or not. The adoption of innovativeness by questioners is a critical factor for the diffusion of innovativeness.

When the individual innovativeness levels of the participants in the study are analyzed in general, it is observed that the majority are in the highly innovative group.

Table 8: General Distribution of Individual Innovativeness

	f	**%**
Highly Innovative	186	54,2
Low in İnnovativeness	111	32,4
Other	46	13,4

While the highly innovative group was 54.2%, the group with low innovativeness was 32.4%. It was also revealed that there was a group of 13.4% among the participants who could not be included in both of these groups according to their individual innovativeness scores.

Given the results presented in Table 9, since the coefficient was higher than .05, it can be stated that there was normal distribution for gender.

Table 9: Individual Innovativeness(II) Normal Distribution by Gender

	Gender	Kolmogorov-Smirnov		
		Statistic	df	Sig.(p)
II_Mean	Female	0.072	171	0.083
	Male	0.074	172	0.200

According to the values obtained from the independent sample t-test analysis for the question "Do the individual innovativeness levels of the participants show a significant difference according to gender?", which is among the sub-problems of the research, no significant difference was found between the gender variable and the individual innovativeness level.

Table 10: Individual Innovativeness Levels of Participants in Terms of Gender Variable

	Grup	N	X̄	S	sd	t	p
Individual Innovativeness	Woman	171	67,8889	9,70351	341	-1,787	0,177
	Man	172	69,8430	10,53059			

*p≤0,05

According to the findings, there is no significant difference between individual innovativeness level and gender since p≤0.05. According to the research findings, being male or female does not affect the level of individual innovativeness. It means H1 hypothes is not supported.

Given the results presented in Table 11, since the coefficient was higher than .05, it can be stated that there was normal distribution for age.

Table 11: Individual Innovativeness(II) Normal Distribution by Age

	Age	Kolmogorov-Smirnov		
		Statistic	df	Sig.(p)
II_Mean	Under 18 years old	0.173	2	0.06
	18 – 24	0.057	133	0.077
	25 – 34	0.094	95	0.200
	35 – 44	0.128	54	0.089
	45 and above	0.086	59	0.09

When the one-way analysis of variance findings was obtained for the question "Do the individual innovativeness levels of the participants show a significant difference according to age?", which is among the sub-problems of the research, it was determined that there was a significant difference between the individual innovativeness level and the age variable.

Table 12: Individual Innovativeness Levels of Participants in Terms of Age Variable

	Sum of Squares	sd	Mean Squares	F	p
Between Groups	813,925	3	271,308	2,667	0,048
Within Groups	3448,171	339	101,720		
Total	35297,096	342			

*p≤0,05

The results indicated a notable discrepancy in individual innovativeness levels based on age (p≤0.05). Post hoc analysis (Tukey) aimed at discerning specific group differences revealed a significant distinction between the 25-34 age bracket and the 18-24 age group. These findings suggest that age disparities play a role in shaping individual innovativeness levels, as evidenced by the comparison between the 18-24 and 25-34 age groups. As a result it means that H2 hypothes is supported.

In the model created for the research, path analysis was performed in AMOS 28 program for hypothesis tests. The research model in which we will test our hypotheses about whether the individual innovativeness scale has effects on the sub-dimensions of digital citizenship was created. Firstly, the goodness of fit values were checked for the model. The data obtained are listed in the table below.

Table 13. Research Model Goodness of Fit Values

	CMIN/DF	CFI	TLI	IFI	SRMR	RMSEA
Goodness of Fit Acceptance Values	≤ 3	≥ 0,90	≥ 0,90	≥ 0,90	≤ 0,10	≤ 0,08
Goodness of Fit Observed Values	3,039	,673	,657	,676	-	,077
Goodness of Fit Improved Values	2,659	,735	,721	,738	,0984	,070

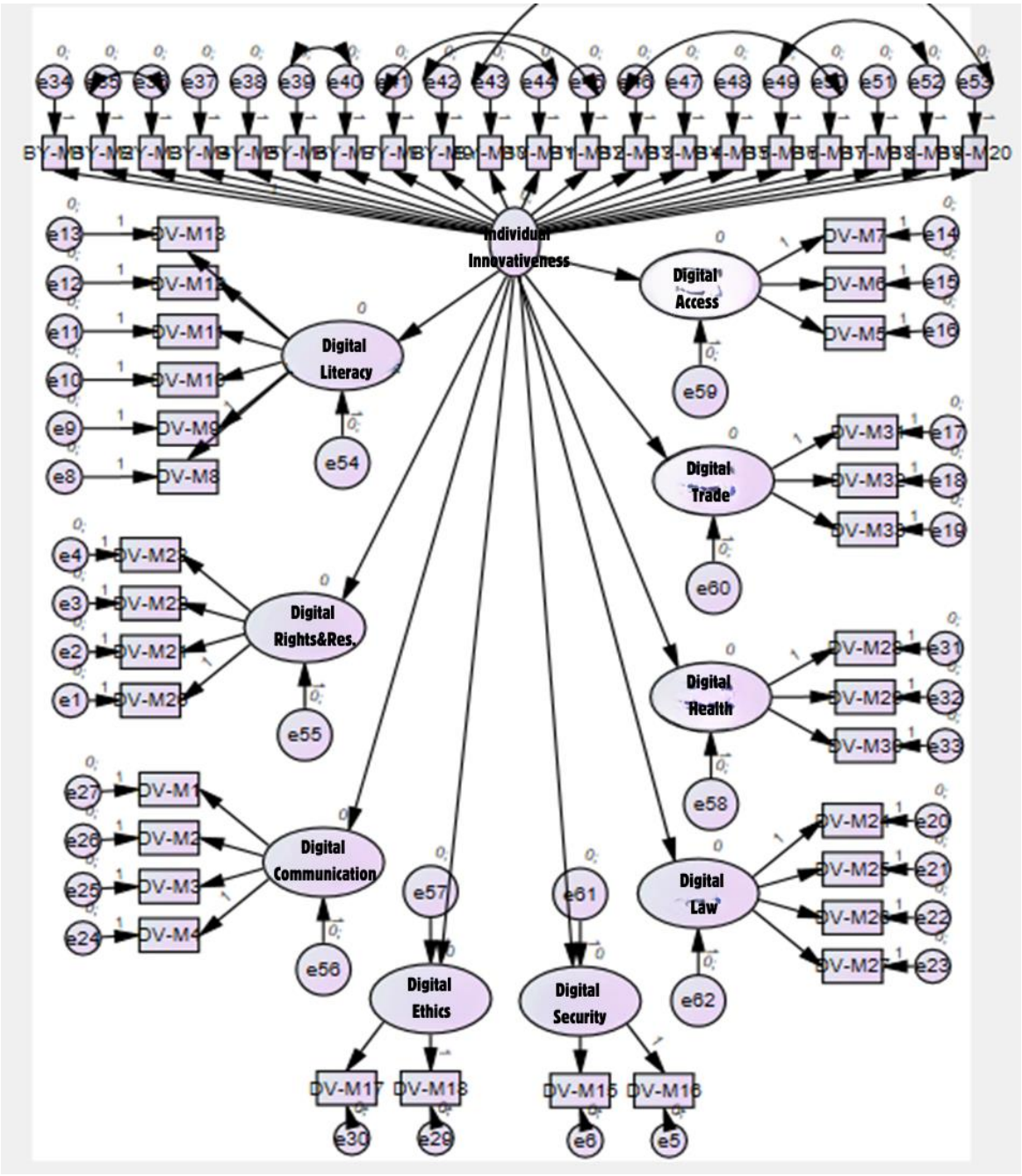

Figure 2. Path Analysis Model for the Effects of Individual Innovativeness on Subdimensions of Digital Citizenship.

When the first results obtained as a result of the analysis of the model were analyzed, it was seen that the values other than RMSEA were outside the adequate goodness of fit values. In order to bring the goodness of fit values to the acceptable values, modification indices were examined. As a result of the control of the modification indices, the items with the highest modification index values were identified and covariance was defined between them. CMIN/DF, SRMR, and RMSEA provided goodness of fit values in the adjusted model. Since the model used was a new model(Figure 2) and the three parameters achieved goodness of fit, there was no harm in ignoring the values that did not achieve goodness of fit. After this stage, hypothesis testing was started. There are a total of nine hypotheses to be hypothesis tested. While conducting hypothesis testing, p and t values revealing the relationships between the factors were examined. Whether the t value is positive or negative determines the direction of the relationship. If the t value is positive, it means that there is a positive relationship between the factors in the specified direction, and if the t value is negative, it means that there is a negative

relationship. In supported hypotheses, the p-value should be less than 0.05 and the t-value should be greater than 1.96. Information on the hypothesis test is given in the findings section.

Nine hypotheses were formed for the question "Does individual innovativeness affect the sub-dimensions of digital citizenship?" which is among the sub-problems of the research. Each hypothesis corresponds to a sub-dimension of digital citizenship and it was examined whether individual innovativeness has an effect on this sub-dimension. The results obtained from hypothesis testing are given in the table.

Table 14: Hypothesis Test Results

Structural Relationship	β	S.E.	t	p	Conclusion
H3: II→ Dijital Literacy	1,471	,191	7,692	***	Supported
H4: II → Digital Rights and Responsibilities	1,361	,177	7,696	***	Supported
H5: II → Digital Communication	,609	,112	5,430	***	Supported
H6: II → Digital Access	1,370	,167	8,219	***	Supported
H7: II → Digital Trade	,704	,122	5,784	***	Supported
H8: II → Digital Security	,949	,162	5,867	***	Supported
H9: II → Digital Law	,482	,089	5,390	***	Supported
H10: II → Digital Health	-,126	,090	1,404	,160	Not Supported
H11: II → Digital Ethics	,657	,109	6,045	***	Supported

*__II__: Individual Innovativeness

It's evident that individual innovativeness exerts a beneficial and noteworthy impact on all eight facets of digital citizenship. Therefore, our eight hypotheses (H3, H4, H5, H6, H7, H8, H9, H11) tested in the path analysis were supported. In this context, it has been revealed that individual innovativeness has an effect on digital literacy, digital rights and responsibilities, digital communication, digital access, digital commerce, digital security, digital law, and digital ethics among the sub-dimensions of digital citizenship. Among the hypotheses, only one hypothesis was not supported. The unsupported hypothesis H10 revealed that individual innovativeness has no effect on digital health.

Although there are not very big differences between the T values, it is observed that the highest value is in the H6 hypothesis with 8,219. In other words, individual innovativeness is most effective in the digital access sub-dimension. The value of hypothesis H9, which has the lowest t-value among the supported hypotheses, is 5,390. Therefore, it has been determined that the least effective sub-dimension of individual innovativeness is digital law.

4. DISCUSSION AND CONCLUSION

In today's world where digital technologies are developing rapidly, how individuals use their innovativeness in digital environments and how they relate it to their digital citizenship skills is an important issue. This research presents an investigation to understand the relationship between individual innovativeness and digital citizenship. Firstly, the individual innovativeness levels of the participants were examined. It was determined that the participants were in the questioner category among the individual innovativeness categories. Inquirers are the group who have knowledge about innovativeness but approach innovativeness more cautiously than innovators or pioneers (Rogers, 2010). Questioning is very important nowadays because a large amount of data, information, and ideas are disseminated rapidly. Therefore, while access to information becomes easier, access to the right information becomes more difficult. An inquisitive approach helps people find the right information and distinguish the wrong information. From this point of view, it can be concluded that the participants' questioning attitude also questioned their digital citizenship skills and showed a more cautious approach to these skills.

The study also examined whether the individual innovativeness of the participants differed according to age and gender variables. It was determined that individual innovativeness did not show a significant difference according to gender. Same as this result, Güngör and Kurtipek (2020) concluded in their research with sports science faculty students that there was no difference in the individual innovativeness levels of the participants

according to gender. Many studies have concluded that there is no significant difference in the level of individual innovativeness according to gender (Göksel and Yıldız, 2021; Yapıcı and Kaya, 2020). In their study where Biricik, Karababa and Sivrikaya (2022) examined the participants' individual innovativeness levels and lifelong learning tendencies, they found a significant difference according to gender in the risk-taking sub-dimension of individual innovativeness. According to their results, they found that men had a higher average than women in the risk-taking subscale. However, they did not find any significant difference according to gender in the total score and other sub-dimensions of the individual innovativeness scale. Our research revealed that there was a significant difference between the individual innovativeness levels of the participants according to their ages. This difference was found to be significant between participants aged 18-24 and participants aged 25-34. However, in the study by Yapıcı and Kaya (2020) where they examined the individual innovativeness levels of teachers, no significant difference was found in the individual innovativeness levels of the participants according to age. When looking at the literature, it was seen that studies on individual innovativeness revealed contradictory results regarding gender and age. For example, while there are studies revealing that there is a significant difference between gender and age and individual innovativeness (Yilmaz and Bayraktar, 2014), on the other hand, there are also studies claiming that the effects of gender and age on individual innovativeness are insignificant (Kılıç and Tuncel, 2014). Due to such contradictions, as suggested by other researchers (Gündüz, 2021), the effects of gender and age on individual innovativeness need to be re-investigated in detail due to these different findings.

One of the other findings of this research is that there is a positive relationship between individuals' innovativeness levels and digital citizenship skills. There is no research in the literature examining the relationship between individual innovativeness and digital citizenship. However, Ribble (2011), who examines digital citizenship in 9 dimensions, states that the use of digital tools should start from childhood in order for the perception of digital citizenship to begin at an early age and that digital citizenship is related to the use and acceptance of technology. Von Gillern and oth. (2024) reported the common points between digital citizenship and digital literacy education in their research and emphasized that digital citizenship issues should be integrated into digital literacy education. Because it talks about the strong relationships between digital citizenship and digital literacy. There are many studies in the literature that reveal the relationship between individual innovativeness and technology use and acceptance (von Gillern et al., 2024; Çuhadar, Bülbül and Ilgaz, 2013; Örün et al., 2015; Lu, Yao and Yu, 2005; Hsua, Lub and Hsuc,2007). For example, Özkeş and Kaya (2015) revealed in their research that there is a positive significant relationship between individual innovativeness characteristics and technology acceptance status. Yılmaz and Bayraktar (2014) also found that there was a positive and high level relationship between teachers' attitudes towards technology and teachers' individual innovativeness.

In this research, where the effects of individual innovativeness and digital citizenship on nine sub-dimensions were investigated, a positive and significant relationship was found with all dimensions except one. It was concluded that there was no effect on individual innovativeness and the digital health sub-dimension. It was also concluded that the highest relationship with individual innovativeness was with the digital access sub-dimension. Therefore, it can be said that individuals' innovativeness levels are related to digital literacy, digital law, digital communication, digital access, digital commerce, digital ethics, digital rights and responsibilities and digital security, which are among the sub-dimensions of digital citizenship. Thus, it can be said that as individuals' individual innovativeness levels improve, they will tend to behave more ethically, responsibly and collaboratively in digital environments. In short, the idea that individual innovativeness encourages and develops digital citizenship skills is supported. Whether the relationship between individual innovativeness and digital citizenship has significant effects not only on individuals but also on society at large could be another research topic. More innovative and responsible digital citizens can contribute to the social and economic development of society. Therefore, policymakers and decision-makers should promote policies and regulations that support individual innovativeness and digital citizenship skills and raise more awareness in this area. Policies, educational programs, and methods that support individual innovativeness and digital citizenship skills should be developed and implemented. Apart from this, the limitations of the research should also be taken into consideration. The scope of the research is limited to addressing only the relationship between individual innovativeness and digital citizenship and the impact of other factors is ignored. Therefore, future research can examine this relationship more comprehensively and evaluate the impact of other variables.

REFERENCES

Amabile, T. M. (2019). *Creativity in context: Update to the Social Psychology of Creativity*. Routledge.

Aras, B., Hamutoğlu, N. B., Liman Kaban, A., Taşcı, G., & Aykul, M. (2021). Digital information age: Digital society, digital transformation, digital education and digital competencies. *Açıköğretim Uygulamaları ve Araştırmaları Dergisi, 7*(2), 35-63. https://doi.org/10.51948/auad.911584.

Aydemir, M., & Adamaz, K. (2017). An Analysis of Achievements and Activities included in the Secondary School Social Sciences Curriculum from the Perspective of Common and Course-specific Skills. International Journal of Field Education, 3(2), 37-59. https://doi.org/10.32570/ijofe.342445

Aydın, A. (2015). Global Digital Citizenship. Turkish Librarianship, 29(1), 142-146.

Bentler, P. M., & Yuan, K.-H. (1999). Structural equation modeling with small samples: Test statistics. Multivariate Behavioral Research, 34(2), 181-197.

Biricik, Y. S., Karababa, B., & Sivrikaya, M. H. (2022). Examination of Individual Innovation Levels and Lifelong Learning Tendencies of Students of the Faculty of Sports Sciences. Mediterranean Journal of Sport Science, 5(Special Issue 1), 276-294. https://doi.org/10.38021/asbid.1201754.

Byrne, B. M. (2010). *Structural equation modeling with AMOS: Basic concepts, applications and programming*. Routledge.

Çubukçu, A., & Bayzan, Ş. (2013). Perception of Digital Citizenship in Turkey and Methods of Increasing this Perception by Using the Internet Conscious, Safe and Effective. Middle Eastern & African Journal of Educational Research, 5(148), 148-174.

Çuhadar, C., Bülbül, T., & Ilgaz, G. (2013). Exploring of the Relationship between Individual Innovativeness and Techno-pedagogical Education Competencies of Pre-service Teachers. İlköğretim Online, 12(3), 797-807.

Demirel, Y., & Seçkin, Z. (2008). The Impact Of Knowledge And Knowledge Sharing On Innovation. Çukurova Üniversitesi Sosyal Bilimler Enstitüsü Dergisi, 17(1), 189-202.

Ebert, C. & Duarte, C. H. (2018). *Digital transformation*, IEEE Softw., 35: 16-21.

Göksel, A.G. & Yıldız, L. (2021). Examining Individual Innovativeness Levels Of University Students: Sample Of The Faculty Of Sports Sciences. International Social Sciences Studies Journal, (e-ISSN:2587-1587) Vol:7, Issue:76; pp:107-117. Doi: 10.26449/sssj.2756.

Güngör, N. B., & Kurtipek, S.(2020). Examining the effect of individual innovation level of students of sports sciences faculty on digital literacy with structural equation model. Journal of Human Sciences, 17(2), 756–767. Doi: 10.14687/jhs.v17i2.6021.

Gündüz, Ş.(2021). Examining The Relationship Between Individual Innovativeness And Digital Nativeness Levels of Teachers. Education and Science, 46(205), 261-277. doi:10.15390/EB.2020.9006

Hair, J. F. (2009). *Multivariate Data Analysis*. Pearson.

Hirschman, E. (1980). Innovativeness, Novelty Seeking and Consumer Creativity. Journal Of Consumer Research, 7, 283-295.

Hsua, C. L., Lub, H. P., & Hsuc, H. (2007). Adoption of the mobile Internet: An empirical study of multimedia message service (MMS). The International Journal of Management Science, 35(6), 715-726. doi:10.1016/j.omega.2006.03.005

Isman, A., & Canan Gungoren, Ö. (2014). Digital citizenship. Turkish Online Journal of Educational Technology-TOJET, 13(1), 73-77.

Jæger, B.(2021). *Digital Citizenship—A Review of the Academic Literature*. Dms Der Mod. Staat Z. Für Public Policy Recht Und Manag., 14, 24–42.

Karasar, N. (2017). *Bilimsel araştırma yöntemi: Kavramlar ilkeler teknikler*. Nobel Akademik Yayıncılık.

Kılıç, H., & Tuncel, Z. A. (2014). Primary subject teachers' individual innovativeness levels and lifelong learning tendencies. International Journal of Curriculum and Instructional Studies (IJOCIS), 4(7), 25-37.

Kılıçer, K., & Odabaşı, H. F. (2010). Individual Innovativeness Scale (Is): The Study Of Adaptation To Turkish, Validity And Reliability. Hacettepe Üniversitesi Eğitim Fakültesi Dergisi, 38, 150-164.

Lewis, M. (2018*). Outsourcing, new technologies and new technology risks: Current and trending UK regulatory themes, concerns and focuses.* J. Secur. Oper. Custody, 10, 145–156.

Lu, J., Yao, J. E., & Yu, C. S. (2005). Personal innovativeness, social influences and adoption of wireless Internet services via mobile technology. The Journal of Strategic Information Systems, 14(3), 245-268.

Örün, Ö., Orhan, D., Dönmez, P., & Kurt, A. A. (2015). Exploring The Relationship Between Individual Innovativeness And Technology Attitude Of Teacher Candidates. Trakya Üniversitesi Eğitim Fakültesi Dergisi, 5(1), 65-76.

Özkeş, B., & Kaya, S. (2015). Examining the Relationship between Teachers' Individual Innovativeness and Technology Acceptance Status. Participatory Educational Research, 2(5), 60-69. https://doi.org/10.17275/per.15.spi.2.8

Ribble, M. (2011). Digital Citizenship in Schools, (2nd ed.). International Society for Technology in Education.

Ribble, M. (2015). Digital citizenship in schools: Nine elements all students should know (3rd ed.). International Society for Technology in Education.

Rogers, E. M. (2010). *Diffusion of innovativeness*. Simon and Schuster.

Simonton, D. K. (1999). Origins of genius: Darwinian perspectives on creativity. Oxford University Press.

Simsek, E.; Simsek, A.(2013). New literacies for digital citizenship. Contemp. Educ. Technol., 4, 126–137.

Simsek, Ö. F. (2007). Introduction to structural equation modeling: Basic principles and LISREL applications., Ekinoks.

Slavkovi´c, M.; Pavlovi´c, K.; Mamula Nikoli´c, T.; Vuˇcenovi´c, T.; Bugarˇci´c, M.(2023). Impact of Digital Capabilities on Digital Transformation: The Mediating Role of Digital Citizenship. Systems 2023, 11, 172. https://doi.org/10.3390/systems11040172.

Uzunsakal, E., & Yıldız, D. (2018). Alan araştirmalarinda güvenilirlik testlerinin karşilaştirilmasi ve tarimsal veriler üzerine bir uygulama. Uygulamalı Sosyal Bilimler Dergisi, 2(1), 14-28.

Von Gillern, S., Gould, H., Gannon, M., & Haskey-Valerius, B. (2024). Digital citizenship and its relevance for literacy education: perspectives of preservice teachers. The Australian Journal of Language and Literacy, 1-18.

Von Hippel, E. (2006). Democratizing İnnovativeness. Cambridge: The MIT Press.

Yapıcı, İ. Ü., & Kaya, S. (2020). Biyoloji Öğretmenlerinin Bireysel Yenilikçilik Düzeylerinin İncelenmesi (Diyarbakir İli Örneği). Elektronik Sosyal Bilimler Dergisi, 19(73), 348-362. Doi: 10.17755/esosder.565729

Yaşlıoğlu, M. M. (2017). Sosyal bilimlerde faktör analizi ve geçerlilik: Keşfedici ve doğrulayıcı faktör analizlerinin kullanılması. İstanbul Üniversitesi İşletme Fakültesi Dergisi, 46, 74-85.

Yilmaz, O., & Bayraktar, D. M. (2014). Teachers' attitudes towards the use of educational technologies and their individual innovativeness categories. Procedia-social and behavioral sciences, 116, 3458-3461. doi:10.1016/j.sbspro.2014.01.783.